SMAC 2003
The Automatic Iteration of SMAC

Brian G. McHenry
Raymond R. McHenry

McHenry Consultants, Inc.
Cary, NC
E-mail: info@mchenrysoftware.com
Website: www.mchenrysoftware.com

SAE 2003

SMAC2003
The Automatic Iteration of SMAC

- What is SMAC?
- Why Automatically Iterate SMAC?
- Prior Work
- Research Approach
- Results
- Discussion and Conclusions
- Future Plans

SMAC2003
The Automatic Iteration of SMAC

- What is SMAC?
  - **S**imulation **M**odel of **A**utomobile **C**ollisions
  - Similar to performing a mathematical full-scale test
  - Created in response to need for more accurate reconstructions and uniform interpretation of evidence

SMAC2003
The Automatic Iteration of SMAC

- What is SMAC?
  - SMAC Includes:
    - Trajectory Model
      - Tires forces modeled pre-impact, during impact, post impact
      - Conservation of Linear *and* Angular Momentum throughout the simulated event

SMAC2003
The Automatic Iteration of SMAC

- What is SMAC?
  - SMAC Includes:
    - Collision Model
      - Finite duration of the impact
      - Tire forces fully active during collision

SMAC2003
The Automatic Iteration of SMAC

- What is SMAC?
  - The inclusion of both Trajectory & Collision Models in SMAC reduces sensitivity to any limitations of either technique
  - SMAC Includes provisions for multiple impact, sustained contacts and provides generality

SMAC2003
The Automatic Iteration of SMAC

- What is SMAC?
- Why Automatically Iterate SMAC?
  - Reduces or eliminates the need to manually iterate
  - Provides testing and refinement of evidence match.
  - Allows sensitivity testing of input variables
  - Includes unlimited objective iterations

SMAC2003
The Automatic Iteration of SMAC

- What is SMAC?
- Why Automatically Iterate SMAC?
  - Saves time!
    - Time required for “best match” limited only by processor speed

SMAC2003
The Automatic Iteration of SMAC

- What is SMAC?
- Why Automatically Iterate SMAC?
- Prior Work
  - Jones, SAE 750894
    - "To make SMAC 'user-orientated' so that users can operate with ease"
    - Found that it is "insufficient to iterate on rest positions alone"

SMAC2003
The Automatic Iteration of SMAC

- What is SMAC?
- Why Automatically Iterate SMAC?
- Prior Work
  - Moffatt and Byrd, 1980 (DOT-HS-8-01820)
    - Iterated impact speeds, steering & braking
    - Limited by computer costs and capabilities

SMAC2003
The Automatic Iteration of SMAC

- What is SMAC?
- Why Automatically Iterate SMAC?
- Prior Work
  - CRASH-97 – 1997, (SAE 970949)
    - Used automatic iteration of SMAC for motions between separation and rest to refine separation speeds
    - Did not include collision simulation due to computational time considerations

SMAC2003
The Automatic Iteration of SMAC

- What is SMAC?
- Why Automatically Iterate SMAC?
- Prior Work
- Research Approach
  - With advent of gigahertz Pentium machines, iteration of complete SMAC including collision feasible
  - This project an extension of our prior work on CRASH-97 (SAE 970949)

Research Approach:

- Create a “function” which provides a measure of the correlation of a SMAC reconstruction with measured evidence
- Choose or create a function minimization routine to guide iterations of SMAC to minimize the “function”

Correlation factor function

- What are important measures in any accident reconstruction?
  - Trajectory measurements
  - Damage measurements

Trajectory Measurements Use Measured Scene Evidence

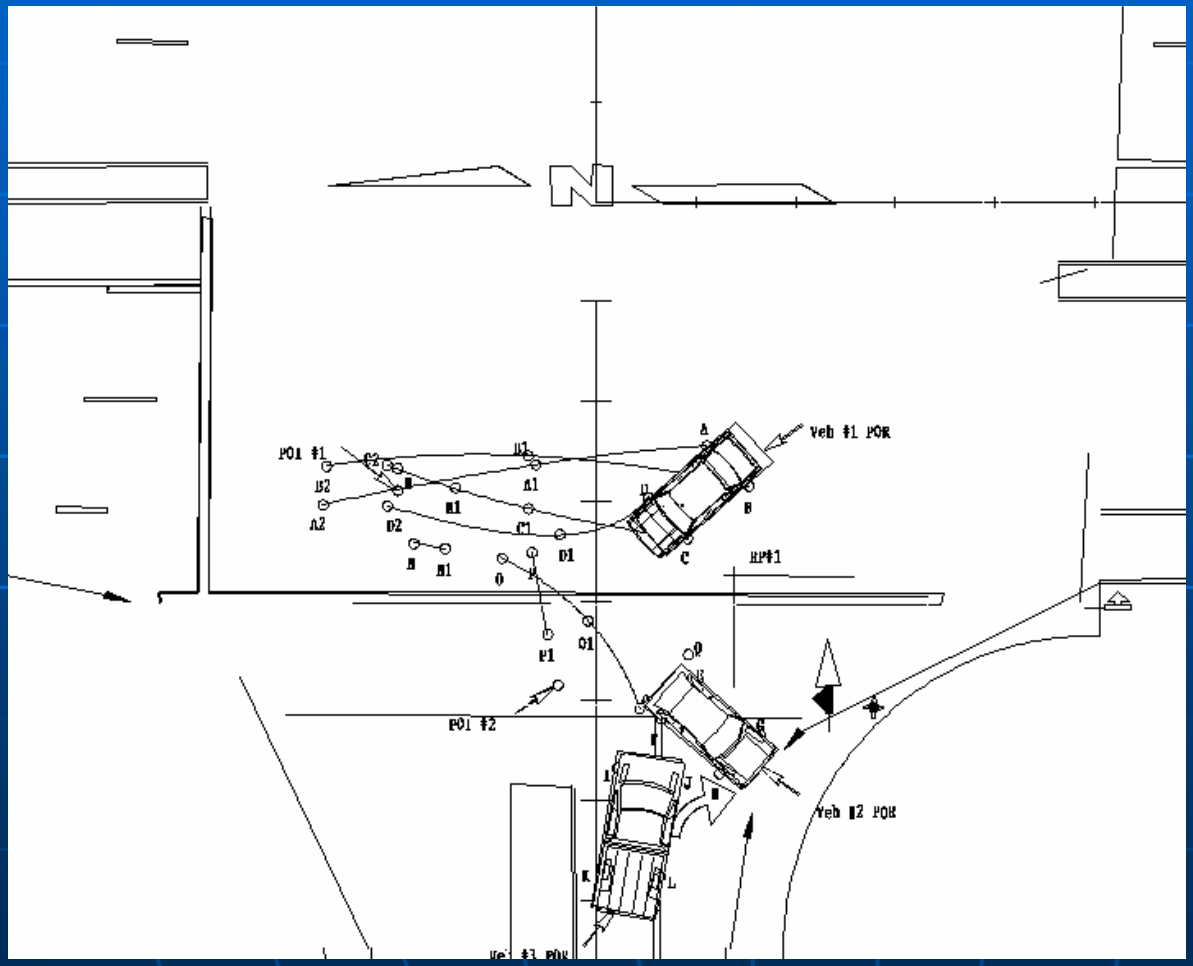

- Directions of travel
- Approx POI
- POR
- Tire tracks and characteristics
- Skidding? Tracking?

SMAC Correlation Function

- **Trajectory measurements**
  - The approximate positions and orientations of the vehicles at impact
  - The measured positions and orientations of the vehicles at rest
  - Distance POI to POR for each vehicle
  - Azimuth angle POI to POR for each vehicle
  - Direction of the System Momentum

Damage Measurements: Use Vehicle Damage Evidence

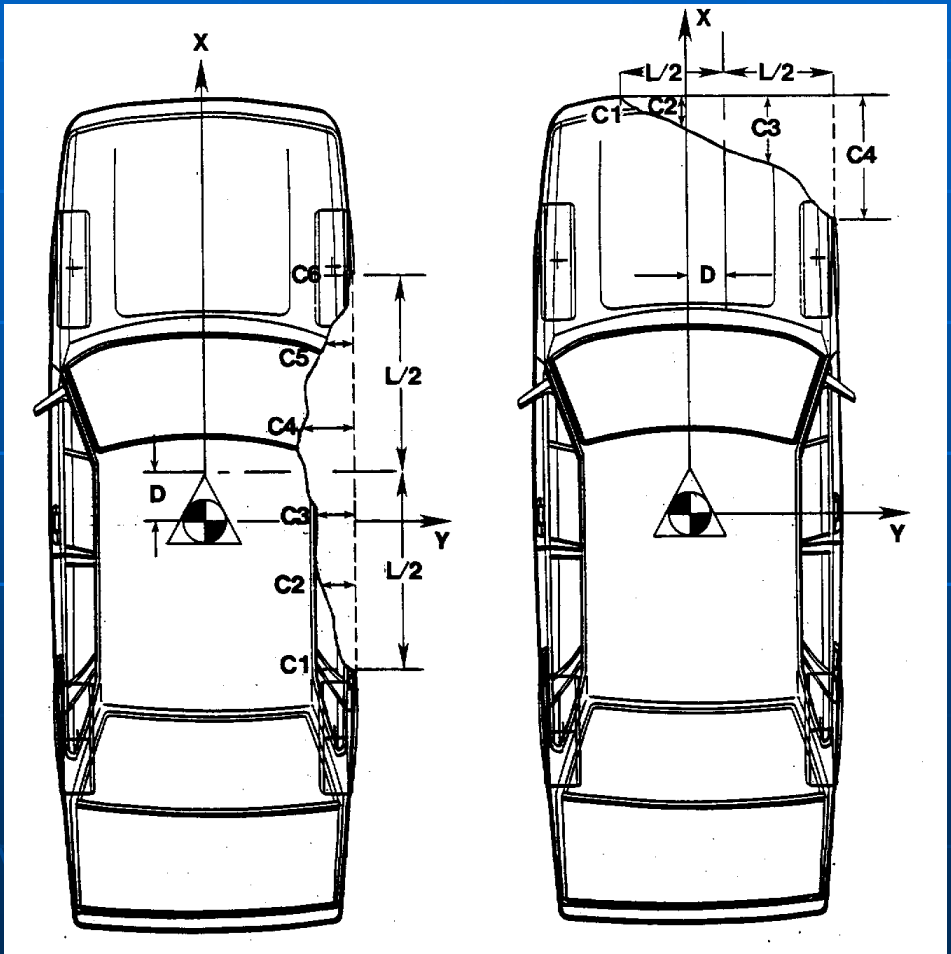

Measure and Define Damage per:

Collision Deformation Classification (SAE J224 MAR80)

Equidistant Crush Measurement (SAE J2433)

Tumbas & Smith (SAE 880072) Damage Measurement Protocol

SMAC Correlation Function

- **Damage measurements:**
  - Damage width
  - Damage depth
  - Damage area
  - Centroid of the damage region
  - Clock direction of the approximate PDOF

SMAC Correlation Factor Damage

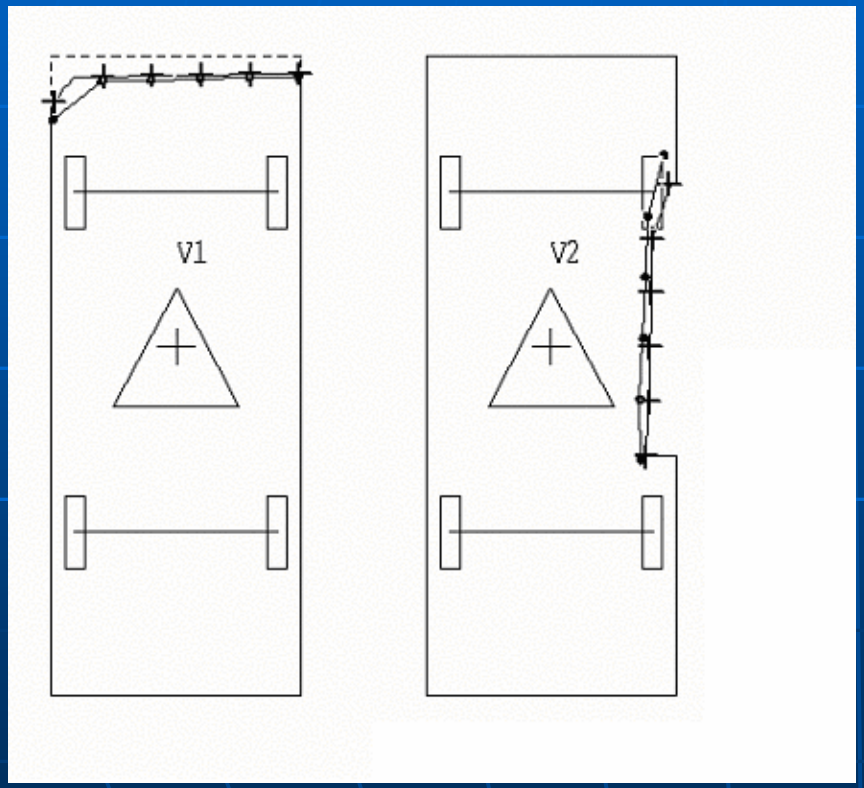

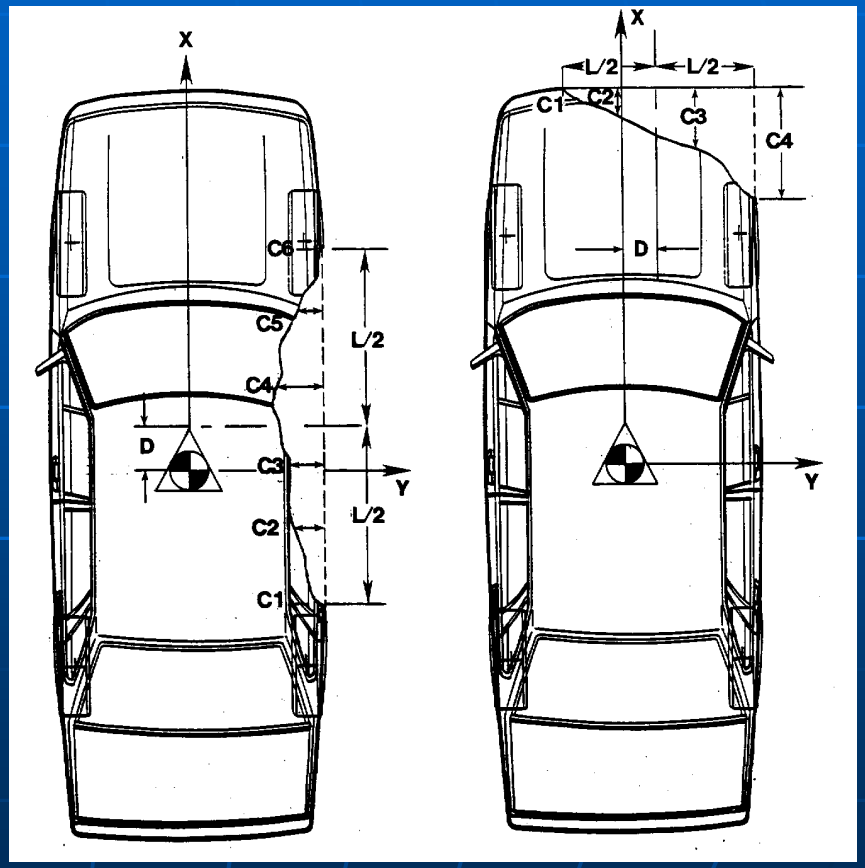

ITERATION PROCEDURE

- Collision responses highly nonlinear
  - Any function minimization technique must handle step discontinuities
  - Restarts to insure a global v local minimum
- Weighting factors to establish priorities
  - Initially to grossly match evidence
  - Secondarily to assist in refinement of match
- Auxiliary calculations and checks
  - To help guide the iteration procedure

ITERATION PROCEDURE

- Starting Values for ITERATION
  - Original intent was simply for improvement
  - CRASH-type interface and information
    - CRASH original intent as SMAC preprocessor
  - Information required:
    - Impact positions and headings.
    - Rest positions and headings.
    - Wheel steer and drag
    - Vehicle type and specifications
    - Damage measurements.

ITERATION PROCEDURE

- For Initial development and testing of SMACITER
  - Used SMAC generated reconstructions based on the RICSAC tests
- Final testing of SMACITER
  - Used ‘raw’ reported test results and other high confidence reconstructions to test convergence ability of SMACITER

ITERATION PROCEDURE

- Variables iterated
  - Initial Speeds and Positions
  - Steering and Braking
    - Minor adjustments of steering and braking within ranges of uncertainty during iteration
  - Sideslip and Angular Velocity Options
    - Provide ability to address control losses preceding impact

SMAC2003
The Automatic Iteration of SMAC

- What is SMAC?
- Why Automatically Iterate SMAC?
- Prior Work
- Research Approach
- Results

RICSAC Test#4

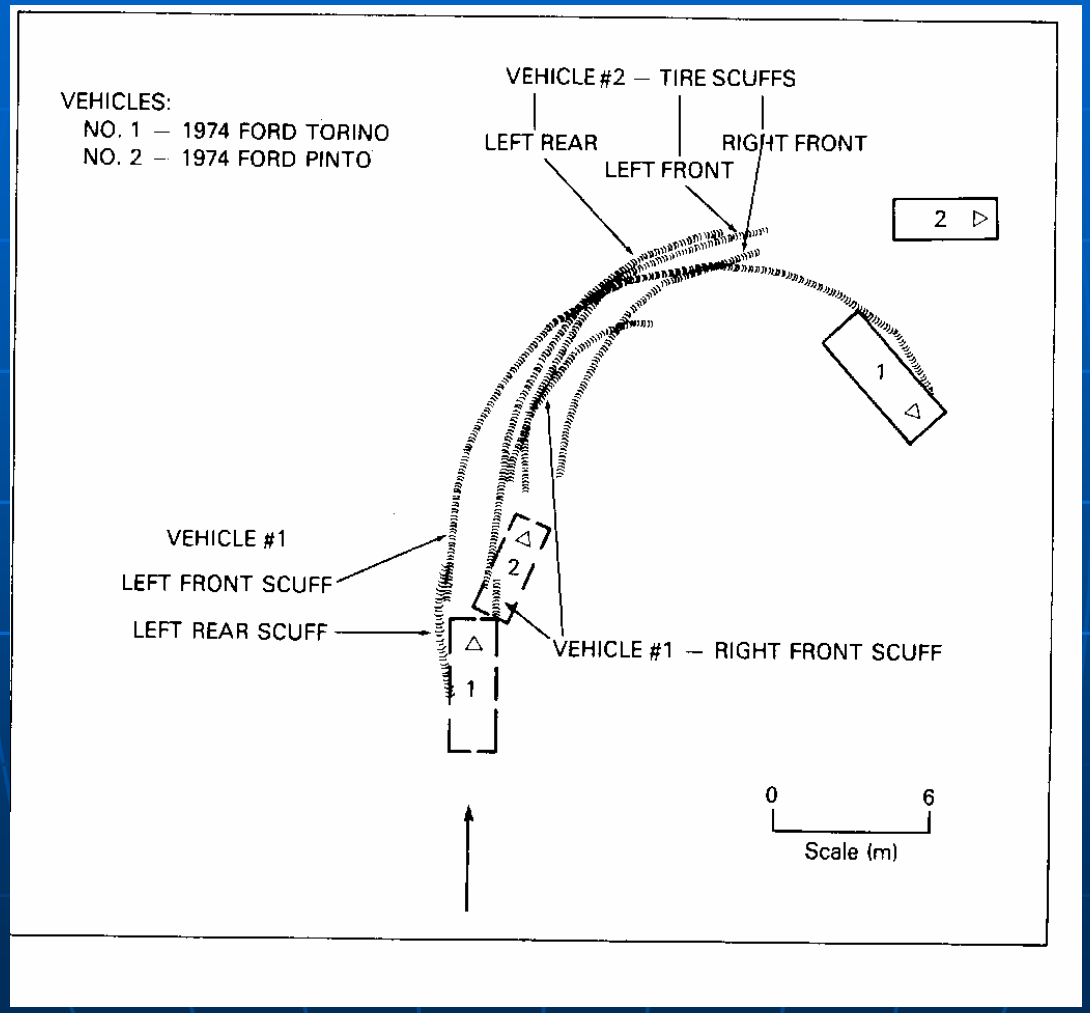

RICSAC Test#4

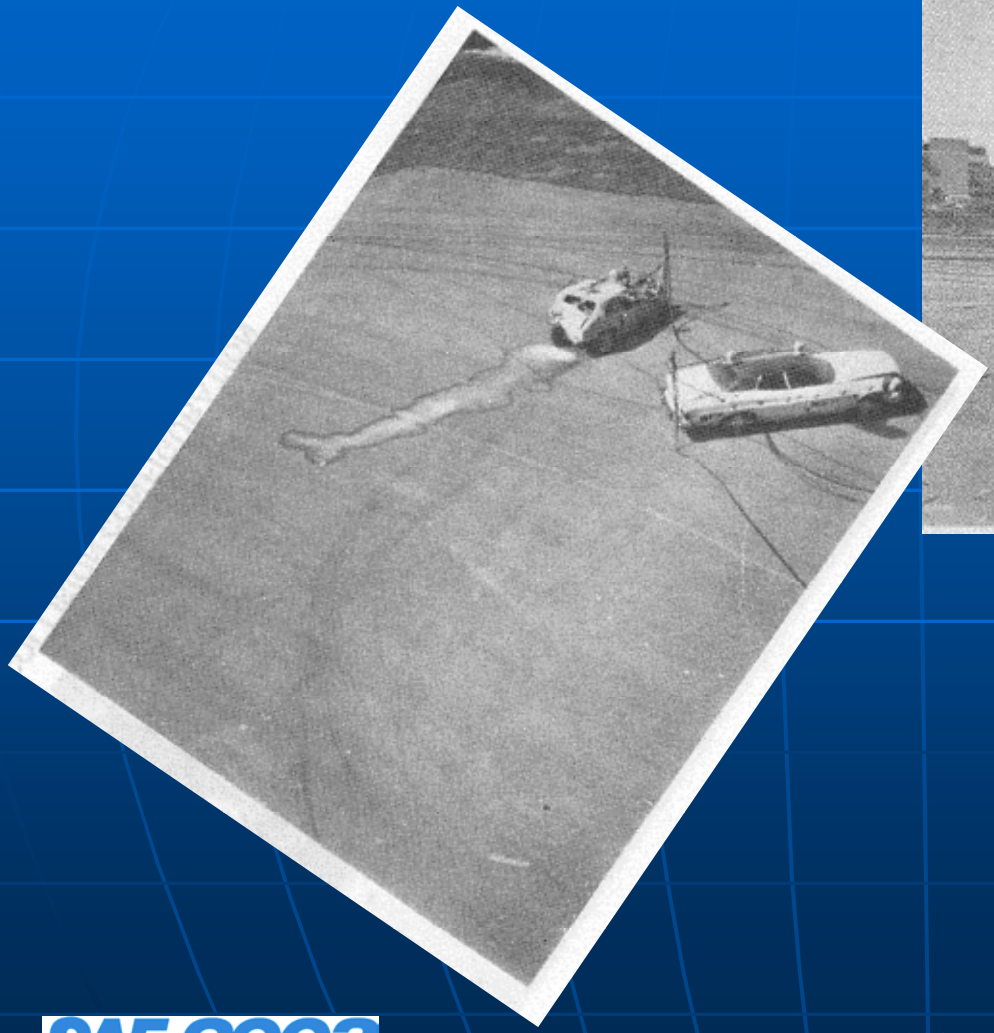

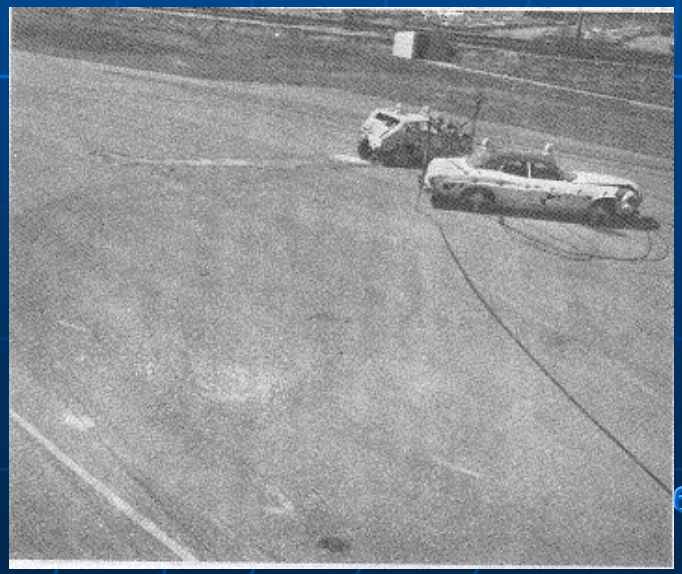

RICSAC Test#4
1st Pass with CRASH results: 31.9 MPH

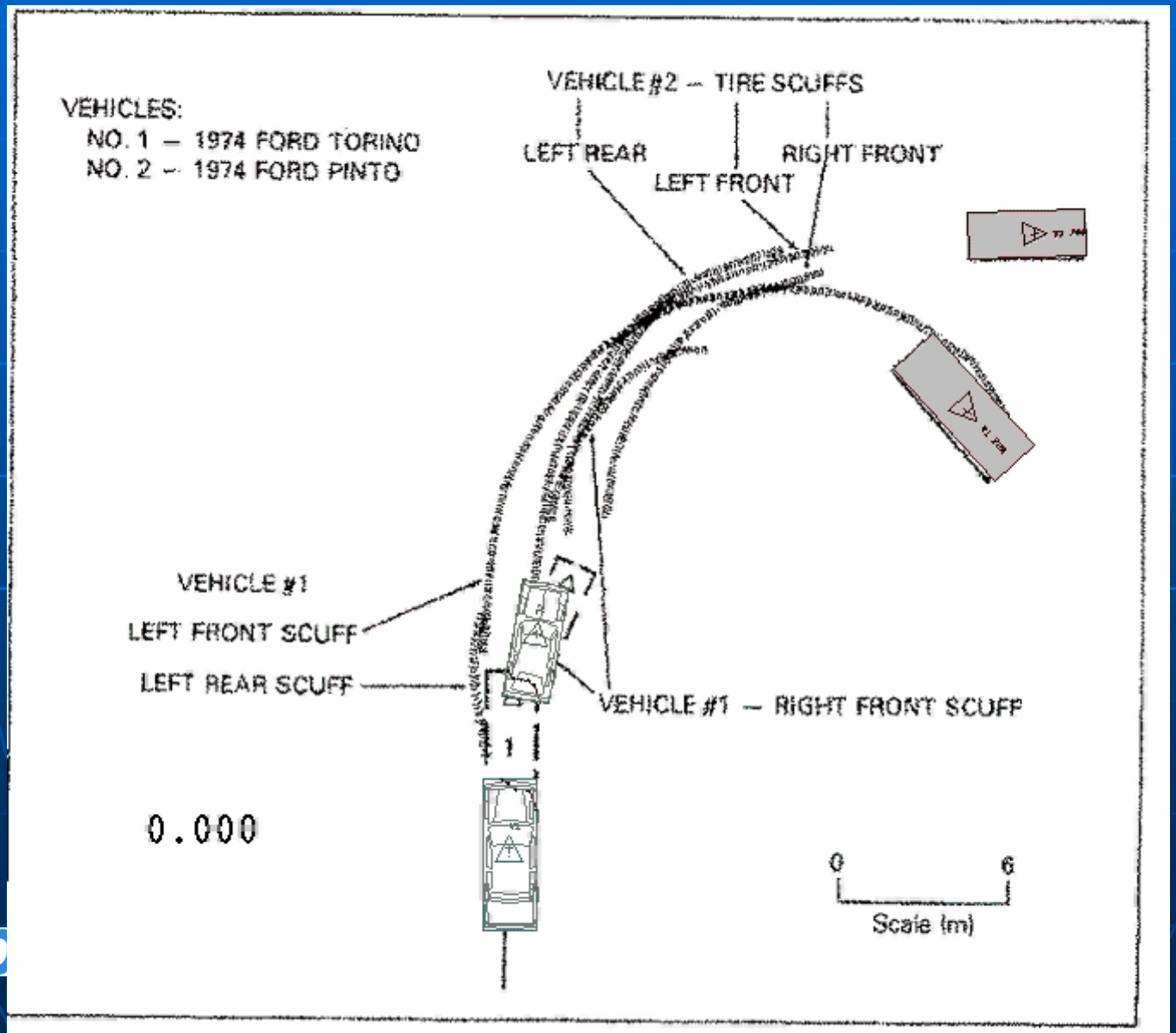

Click on Picture for Animation

RICSAC Test#4 SMACITER

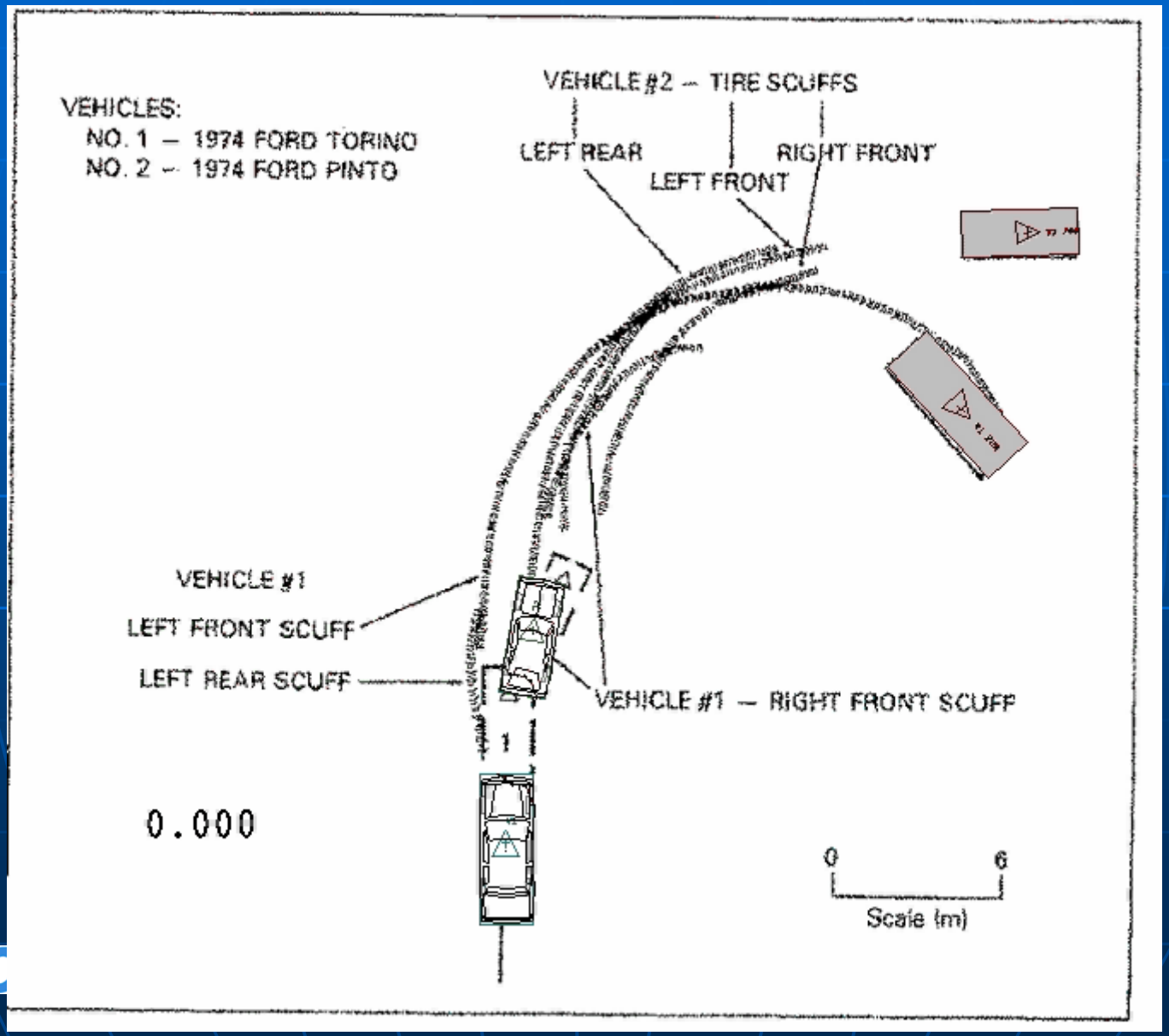

Click on Picture for Animation

RICSAC Test#4 SMACITER Final Results, 38.3 MPH

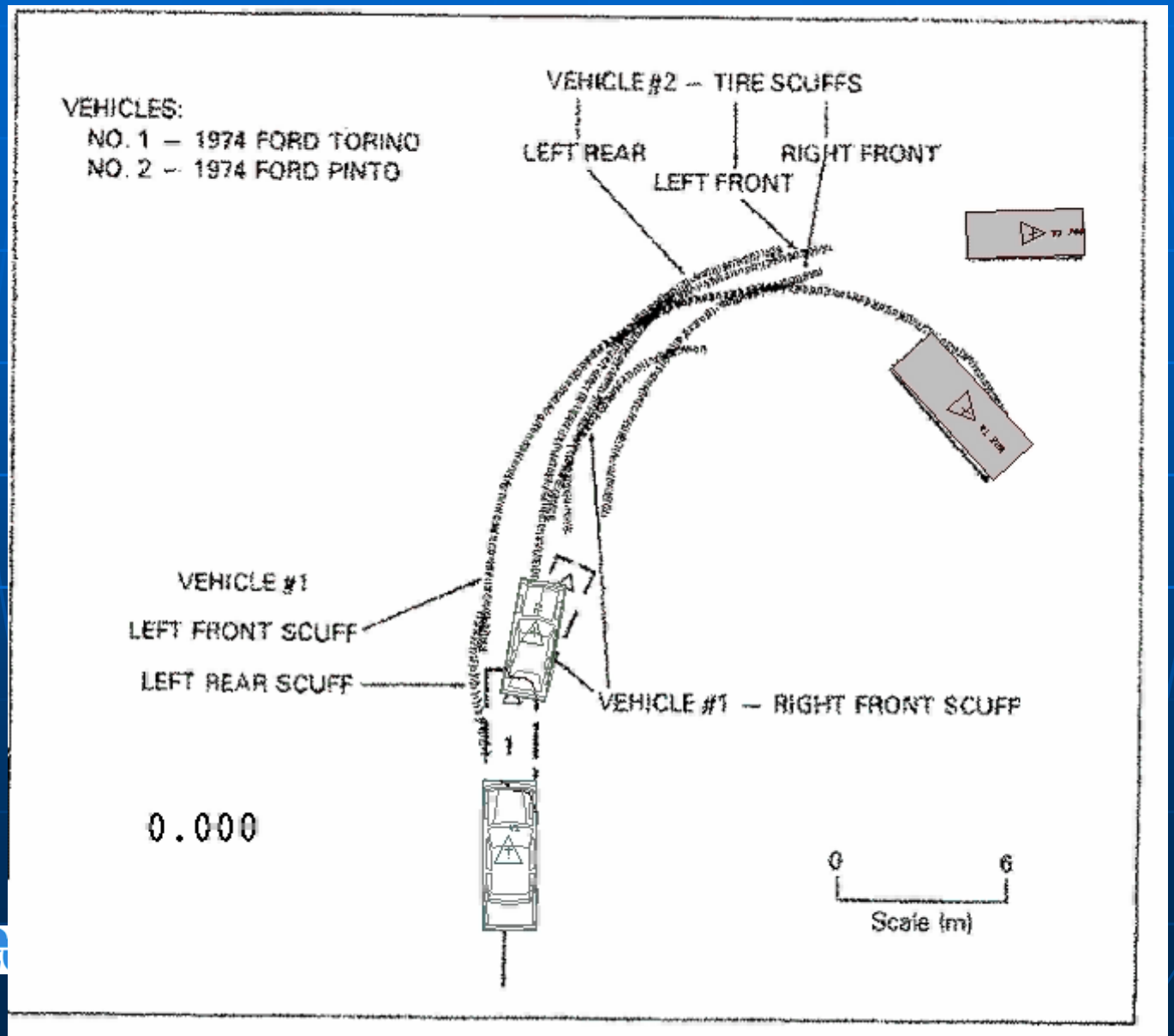

Click on Picture for Animation

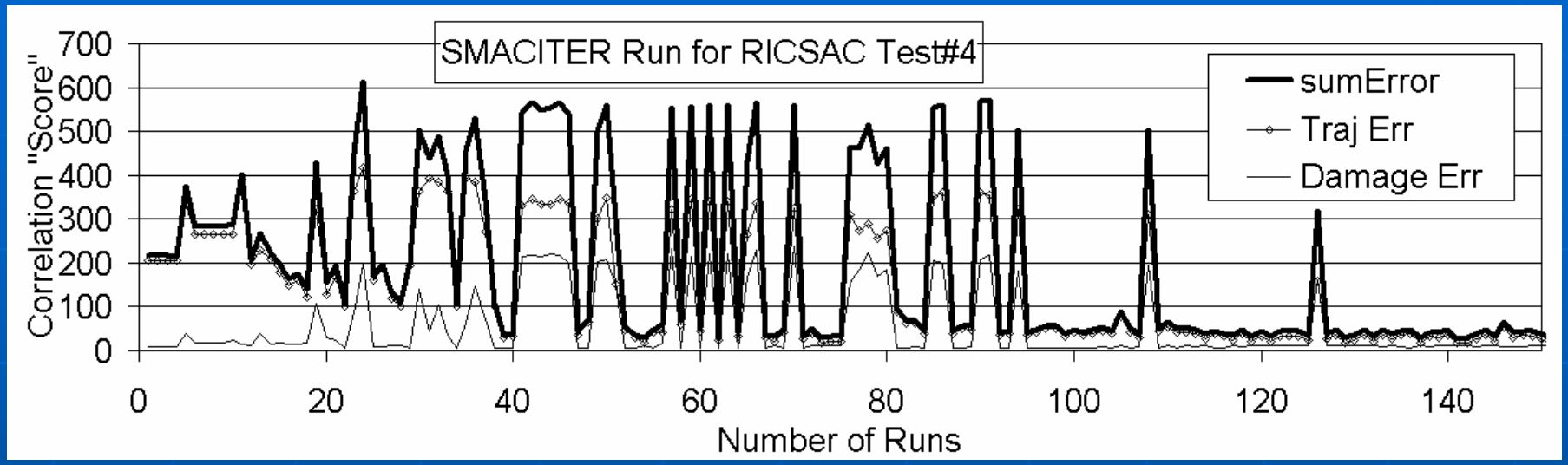

Correlation "Score" is a summation of the deviations from a perfect evidence match

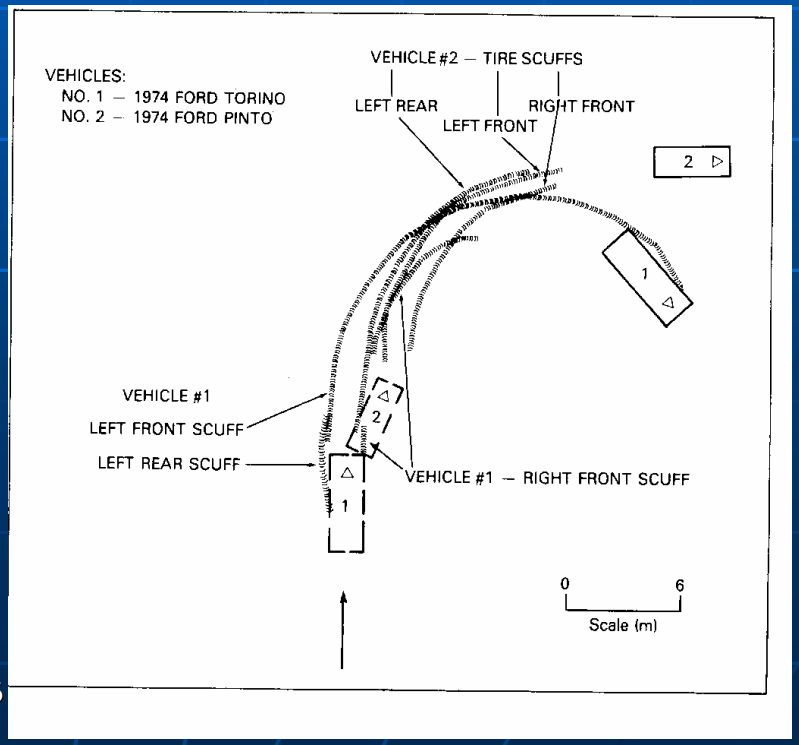

SAE 2003

Paper 2003-01-0486

RICSAC Test#8

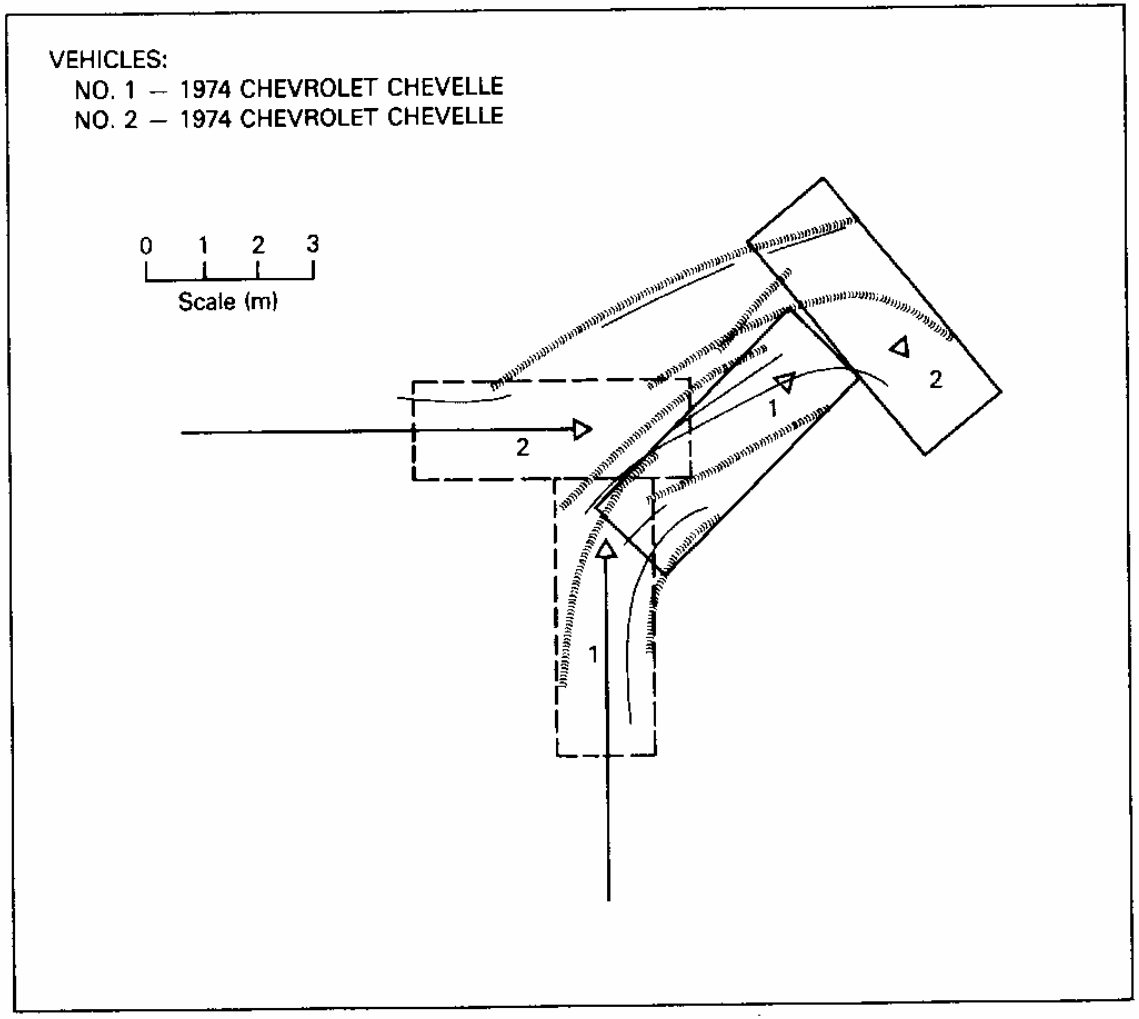

RICSAC Test#8
Impact Speeds 20.8 MPH, 20.8 MPH

RICSAC Test#8, SMAC RUN with CRASH

Speeds 19.5 MPH, 24.5 MPH

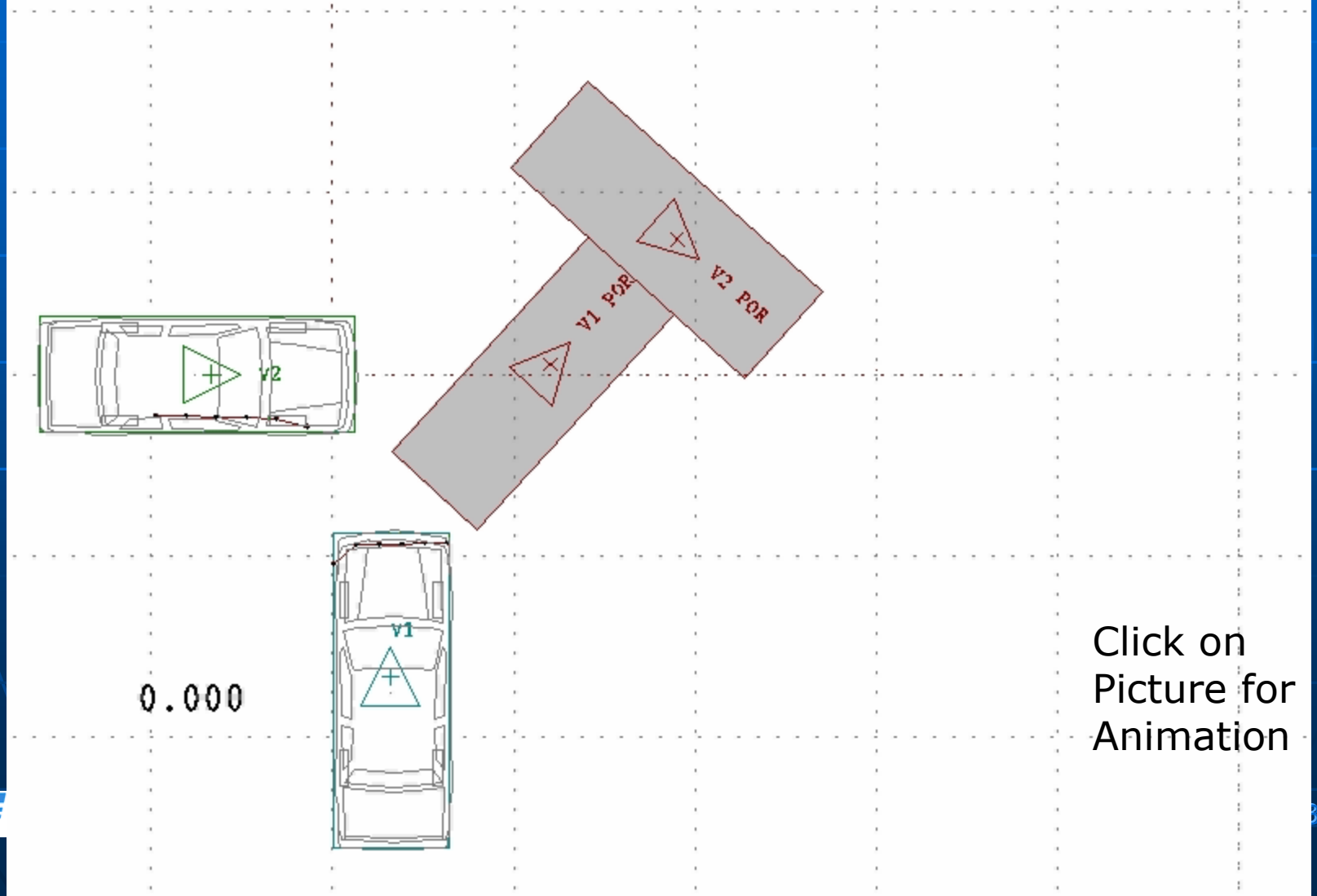

Click on Picture for Animation

Graphic Display of Outputs of Accident Reconstruction
SMAC Collision & Trajectory

This copy Licensed to: Serl APC03163
McHenry Consultants, Inc.,103 Brady Court,Cary, NC 27511

RICSAC TEST48 JONES INPUT
jricsac8.in5 20.75/20.75 start w/crash3 results
C:\msoft\run\ricit8jflst.si5 02/19/03 05:25:28 pm

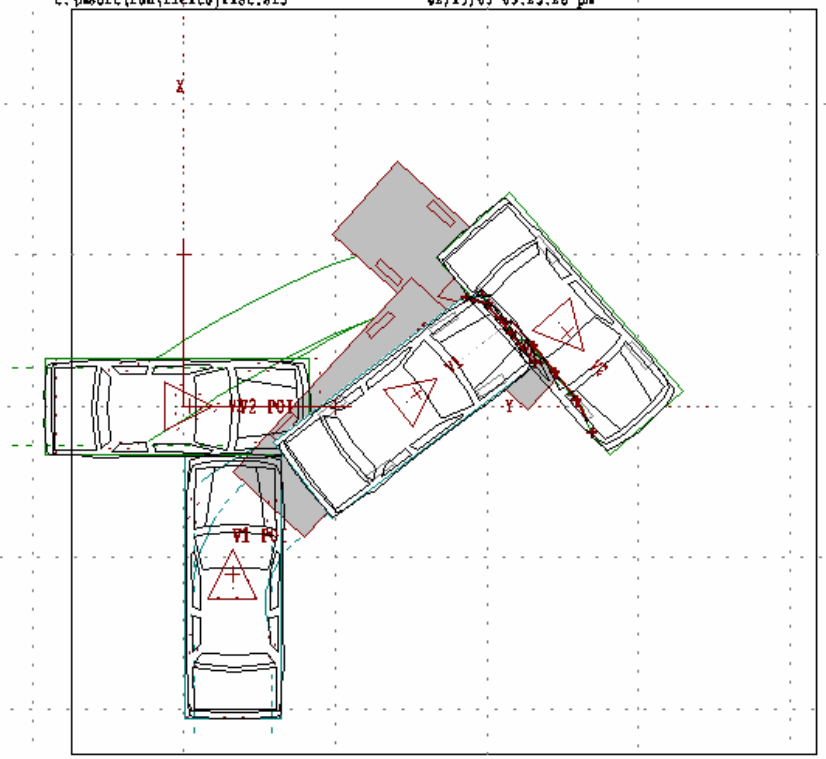

AXIS INTERVALS ARE 10. FEET

RECONSTRUCTED POSITIONS AND VELOCITIES AT IMPACT							DISPLAYED FINAL POSITIONS				VEHICLE DAMAGE INDICES	ΔV
Initial Contact T= 0.195	C.G. POSITION		HEADING				C.G. POSITION		HEADING	REMARKS		
	XC1	YC1	PS11	FWD	LATERAL	ANGULAR	XC1F	YC1F	PS11F			
	FT.	FT.	DEG.	MPH	MPH	DEG/SEC	FT.	FT.	DEG.			MPH
VEHICLE#1	-11.1	3.2	0.0	19.5	0.0	0.0	0.9	15.1	52.7	VEHICLE AT REST	1 1 F D E W 2	14.9
VEHICLE#2	-0.0	0.3	90.0	24.5	0.0	0.0	4.9	25.3	138.7	VEHICLE AT REST	0 2 R D E W 3	13.0

m-sanccr v2002 ©McHenry Software,Inc.,Cary,NC USA

Graphic Display of Outputs of Accident Reconstruction
SMAC Collision & Trajectory

This copy Licensed to: Serl APC03163
McHenry Consultants, Inc.,103 Brady Court,Cary, NC 27511

RICSAC TEST48 JONES INPUT
jricsac8.in5 20.75/20.75 start w/crash3 results
C:\msoft\run\ricit8jflst.si5 02/19/03 05:25:28 pm

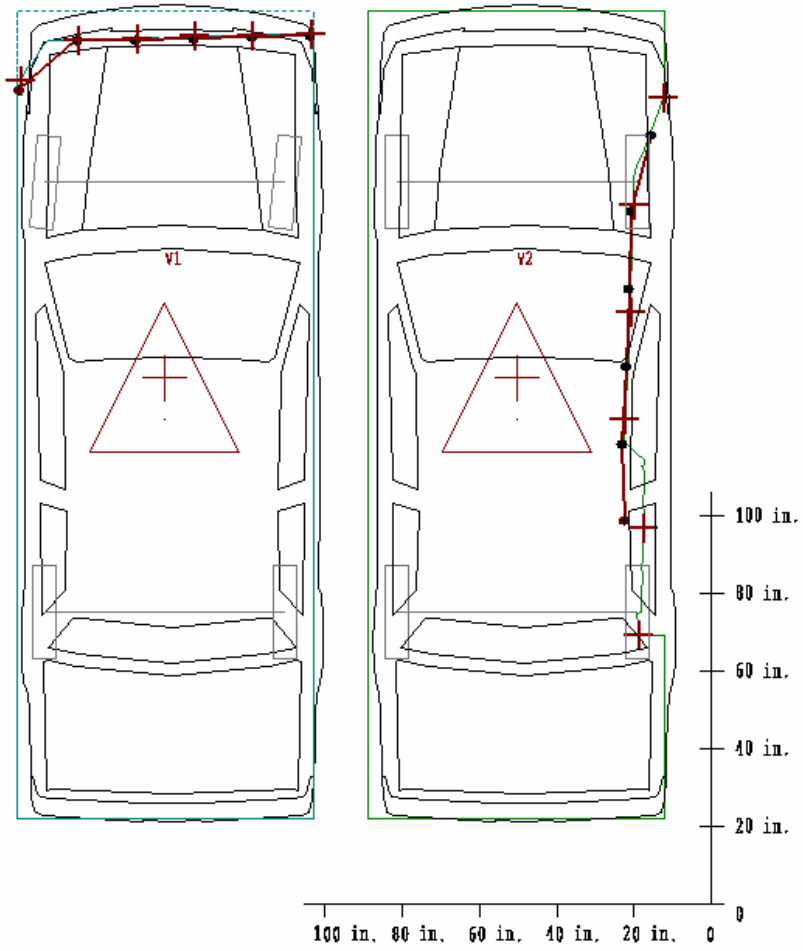

m-sanccr v2002 ©McHenry Software,Inc.,Cary,NC USA

Results with CRASH speeds

RICSAC Test#8, SMACITER Start with CRASH Speeds 19.5 MPH, 24.5 MPH

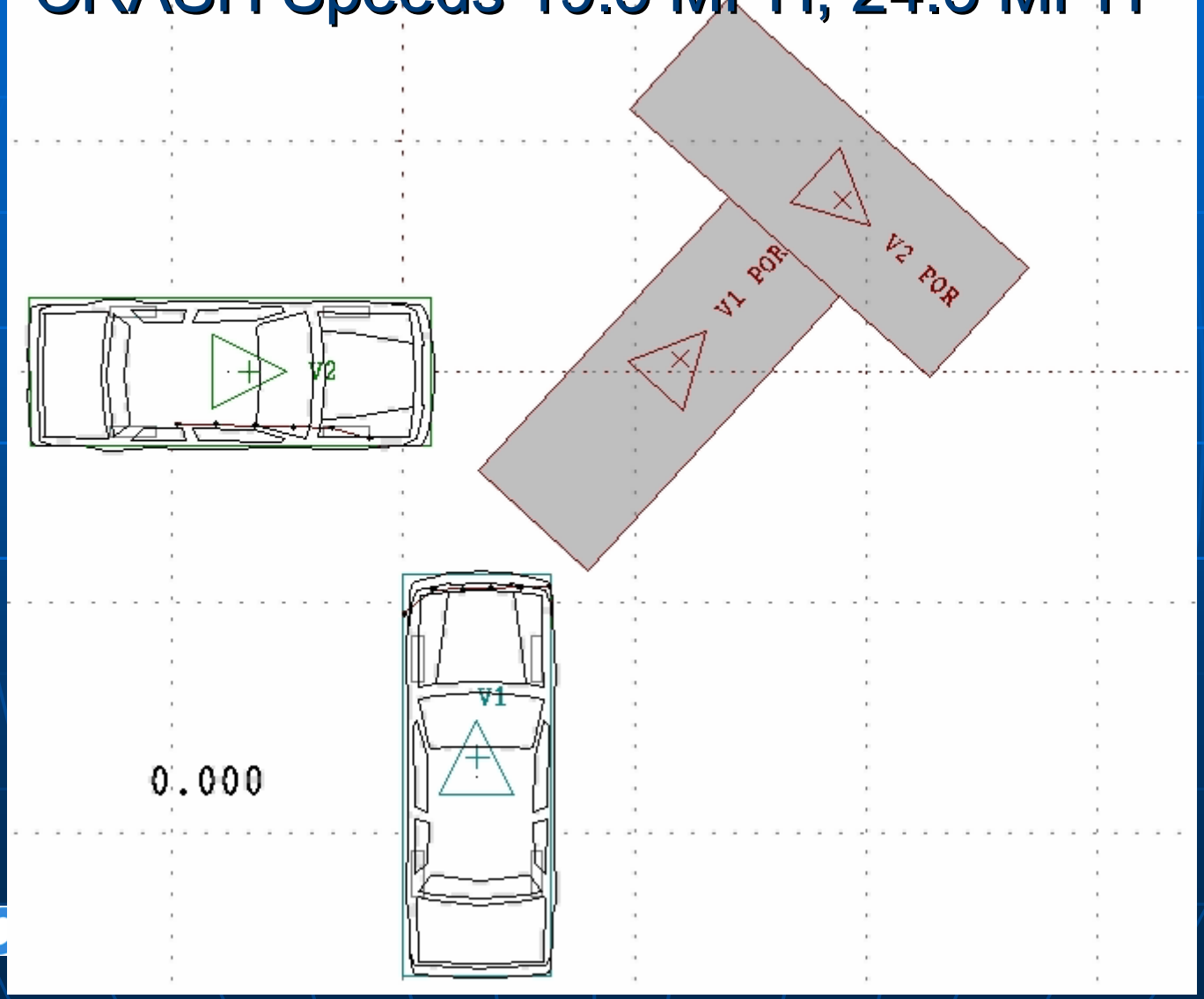

Click on Picture for Animation

RICSAC Test#8, SMACITER RESULTS

20.9 MPH, 20.8 MPH

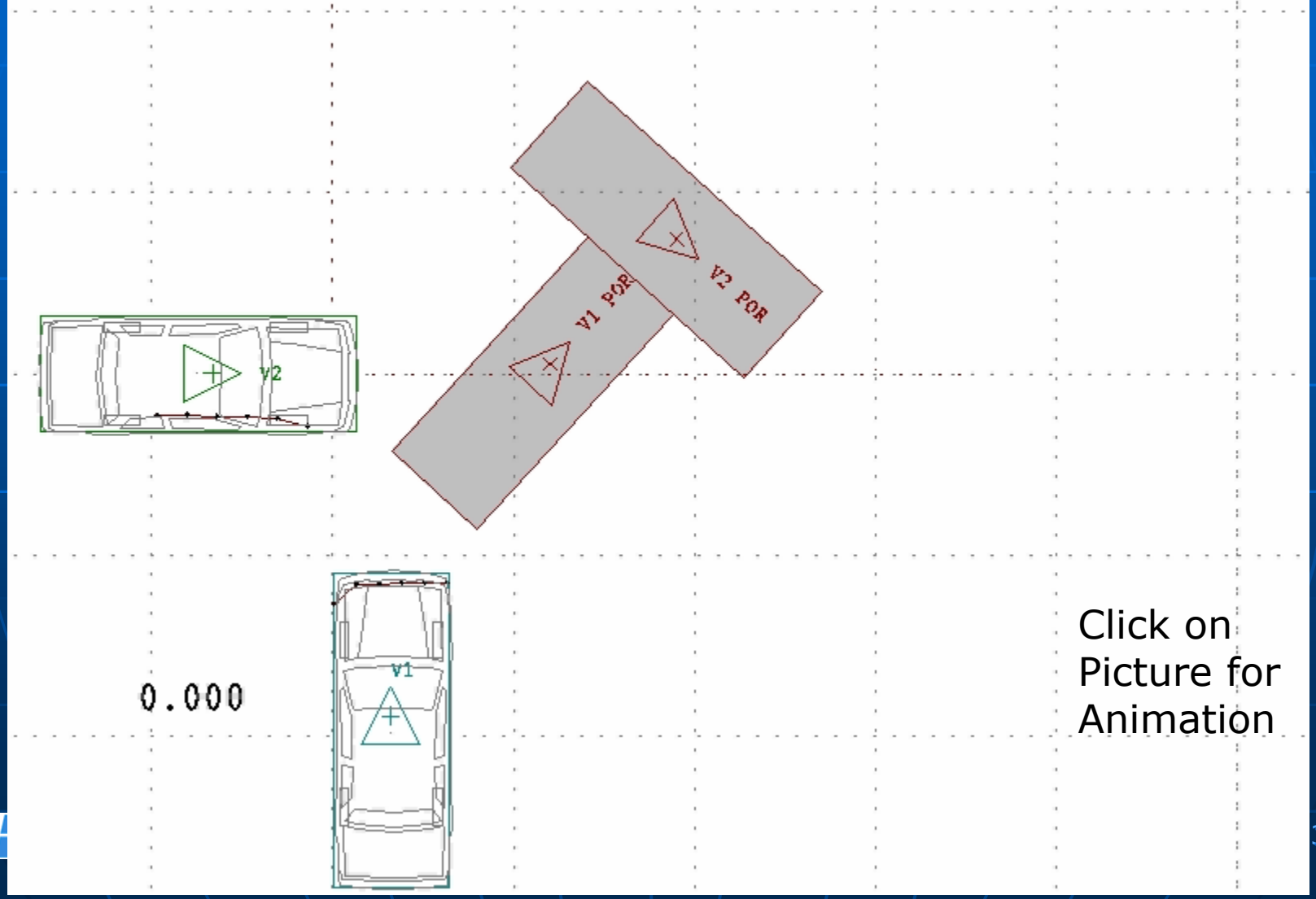

Click on Picture for Animation

Graphic Display of Outputs of Accident Reconstruction
SMAC Collision & Trajectory

This copy Licensed to: Serl AFC03163
McHenry Consultants, Inc.,103 Brady Court,Cary, NC 27511

RICSAC TEST48 JONES INPUT
jricsac8.in5 20.75/20.75 start w/crash3 results
C:\msoft\run\ricit8jflast.si5 02/19/03 05:21:56 pm

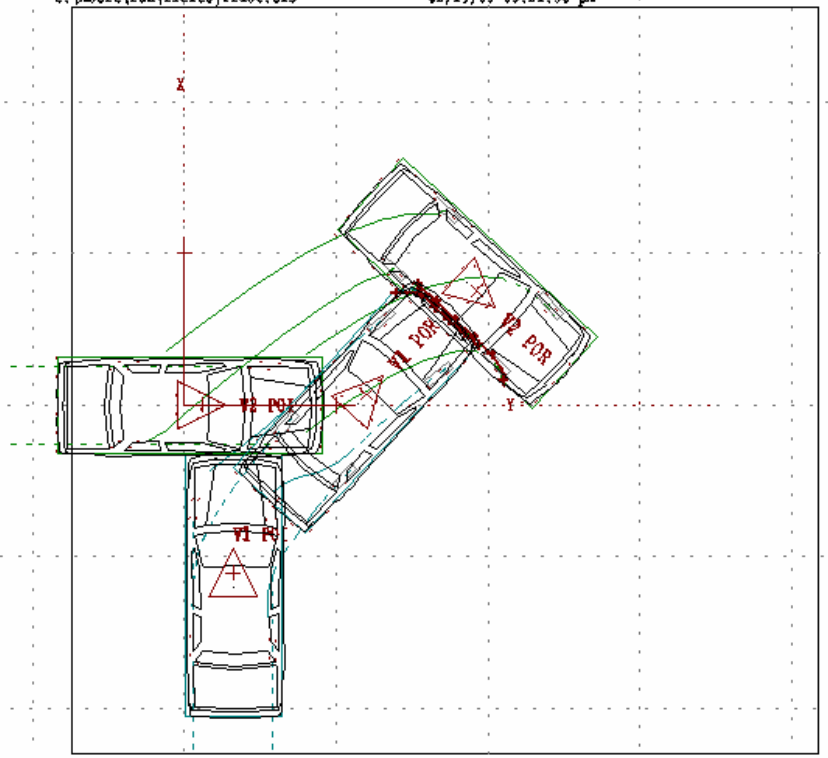

AXIS INTERVALS ARE 10. FEET

RECONSTRUCTED POSITIONS AND VELOCITIES AT IMPACT							DISPLAYED FINAL POSITIONS				VEHICLE DAMAGE INDICES	ΔV
Initial Contact T= 0.255	C.G. POSITION		HEADING				C.G. POSITION		HEADING	REMARKS		
	XC1	YC1	PS11	FWD	LATERAL	ANGULAR	XC1F	YC1F	PS11F			
	FT.	FT.	DEG.	MPH	MPH	DEG/SEC	FT.	FT.	DEG.			MPH
VEHICLE#1	-11.1	3.2	0.0	20.9	0.0	0.0	0.7	12.0	42.6	VEHICLE AT REST	1 2 F D E W 2	3.0
VEHICLE#2	0.0	1.2	90.0	20.8	0.0	0.0	7.5	19.2	132.5	VEHICLE AT REST	D 3 R Y E W 3	1.9

m-sanscgr v2002 ©McHenry Software,Inc.,Cary,NC USA

Graphic Display of Outputs of Accident Reconstruction
SMAC Collision & Trajectory

This copy Licensed to: Serl AFC03163
McHenry Consultants, Inc.,103 Brady Court,Cary, NC 27511

RICSAC TEST48 JONES INPUT
jricsac8.in5 20.75/20.75 start w/crash3 results
C:\msoft\run\ricit8jflast.si5 02/19/03 05:21:56 pm

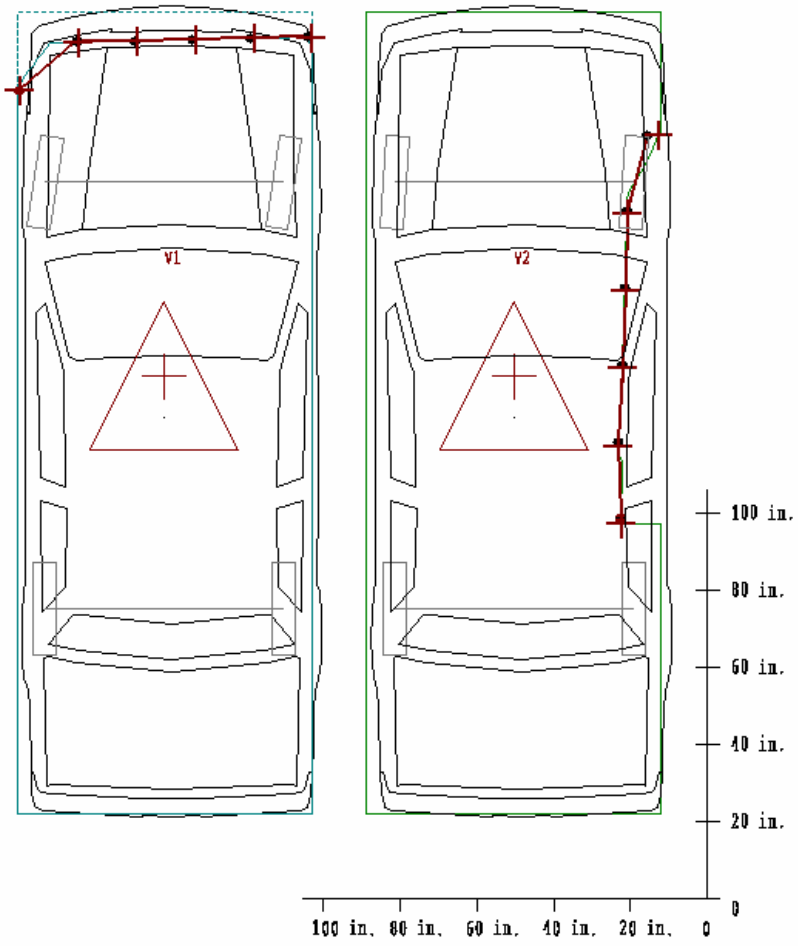

m-sanscgr v2002 ©McHenry Software,Inc.,Cary,NC USA

Summary of SMACITER Results

RICSAC Test#8, Comparison of Results

Vehicle#2

Start

24.5 MPH

V

RESULT

20.8 MPH

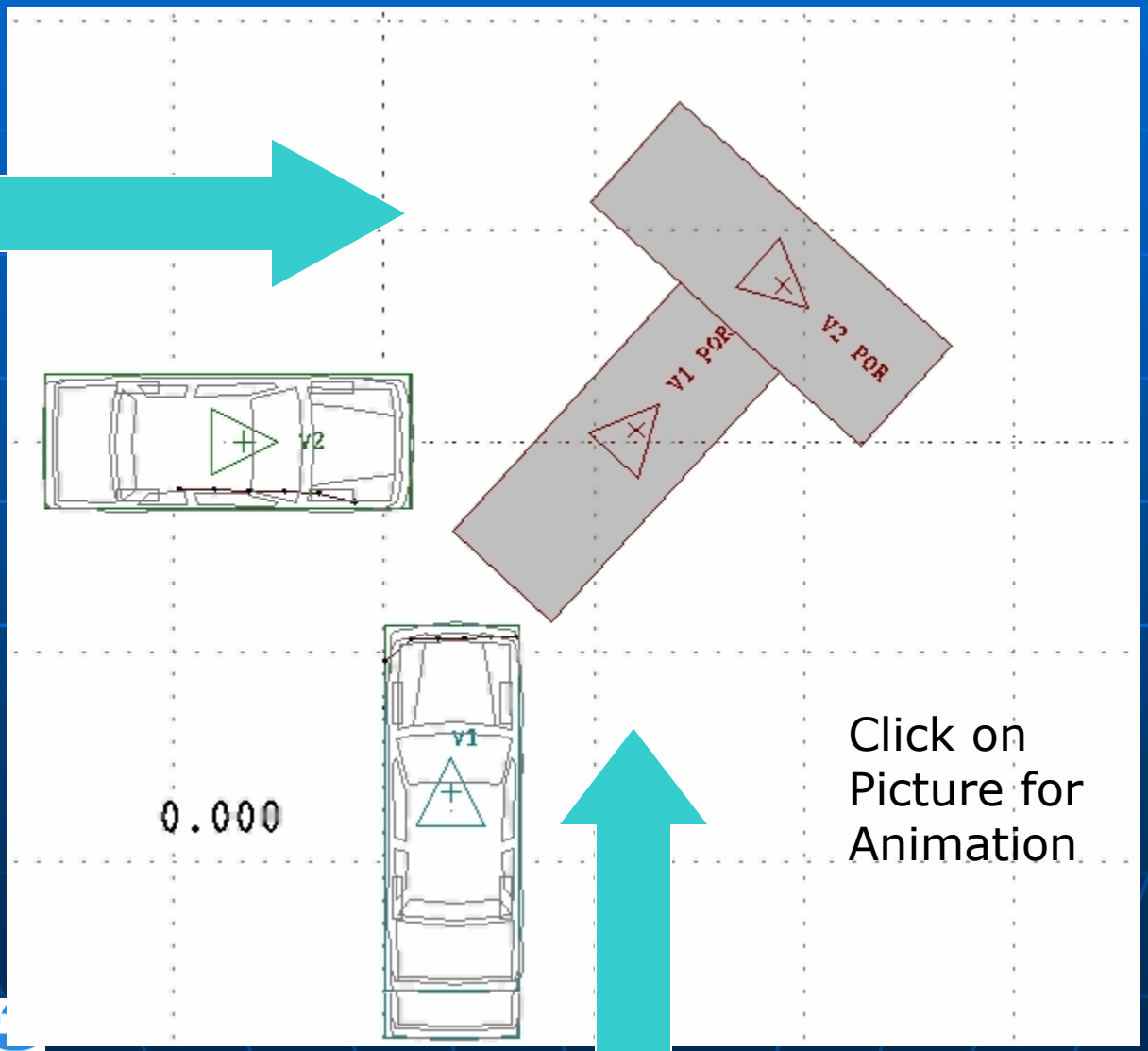

Click on Picture for Animation

Vehicle#1

Start

19.5 MPH

v

RESULT

20.9 MPH

Animation

SMACITER Test
with High Confidence Reconstruction

SMACITER Test
with High Confidence Reconstruction

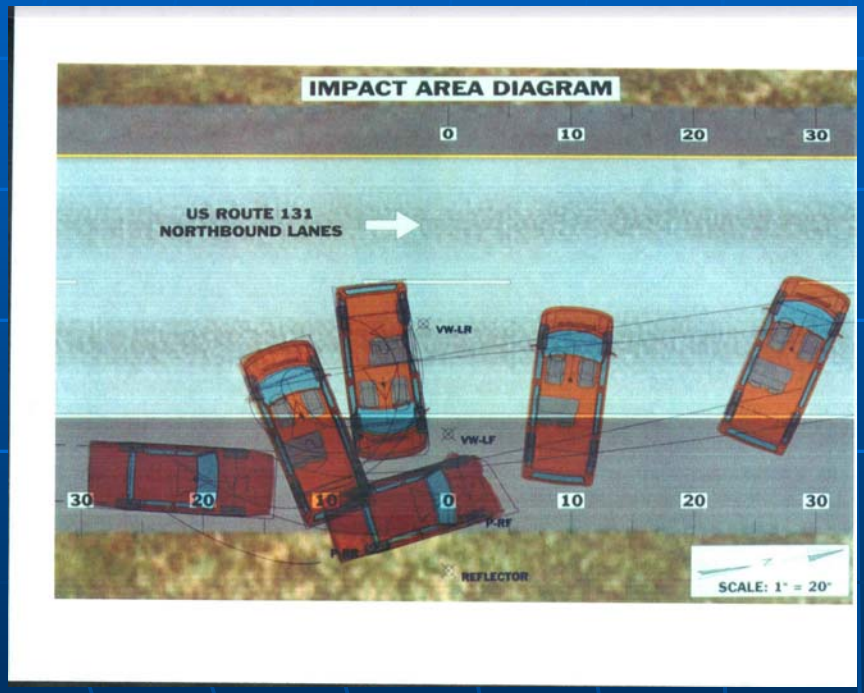

SMAC 1st Pass

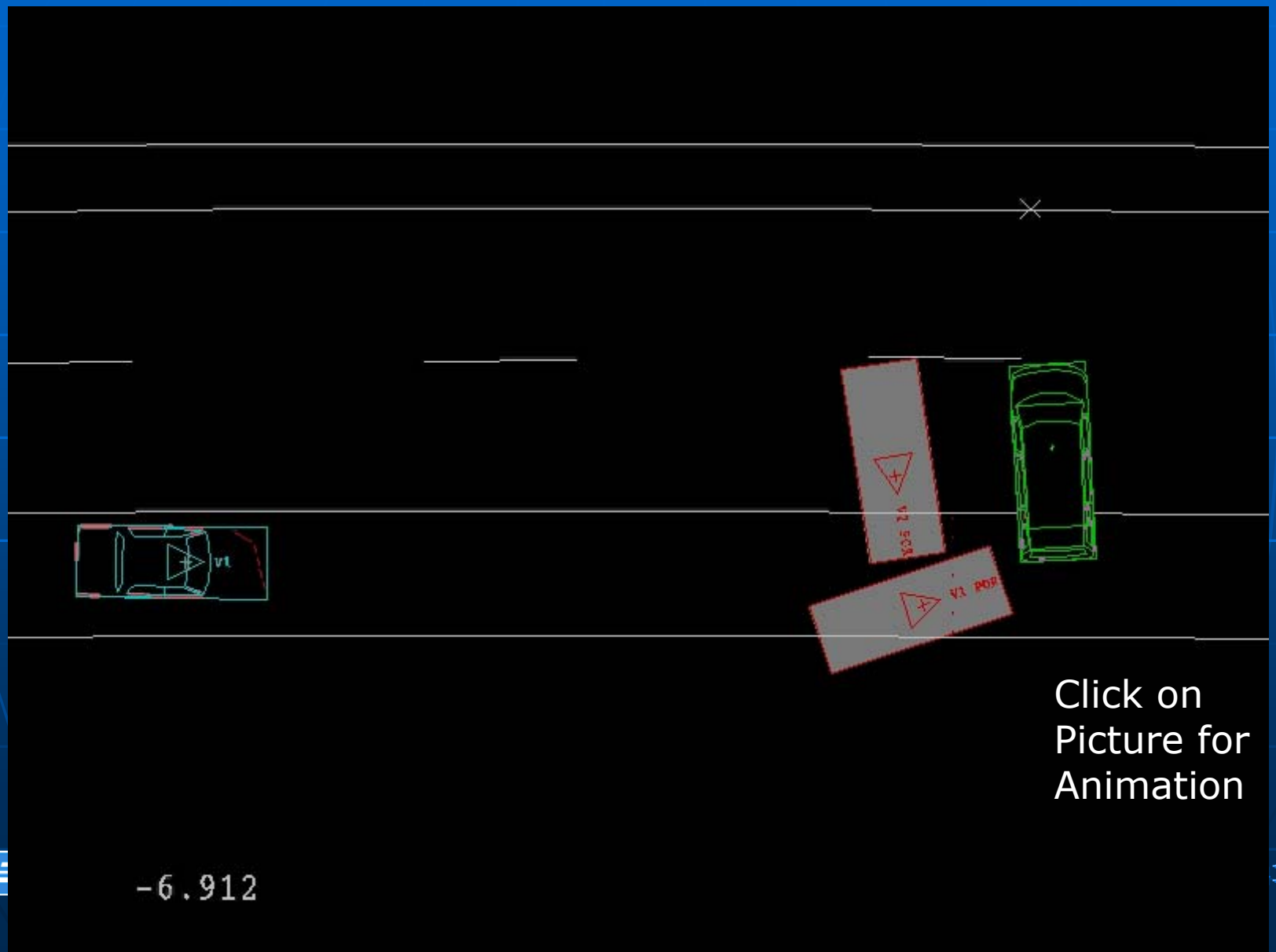

Click on Picture for Animation

Graphic Display of Outputs of Accident Reconstruction
SMAC Collision & Trajectory

This copy Licensed to: Serl AFC03163
McHenry Consultants, Inc.,103 Brady Court,Cary, NC 27511

C:\msoft\run\18321st.si5 Preliminary SMAC analysis 02/19/03 02:28:28 pm

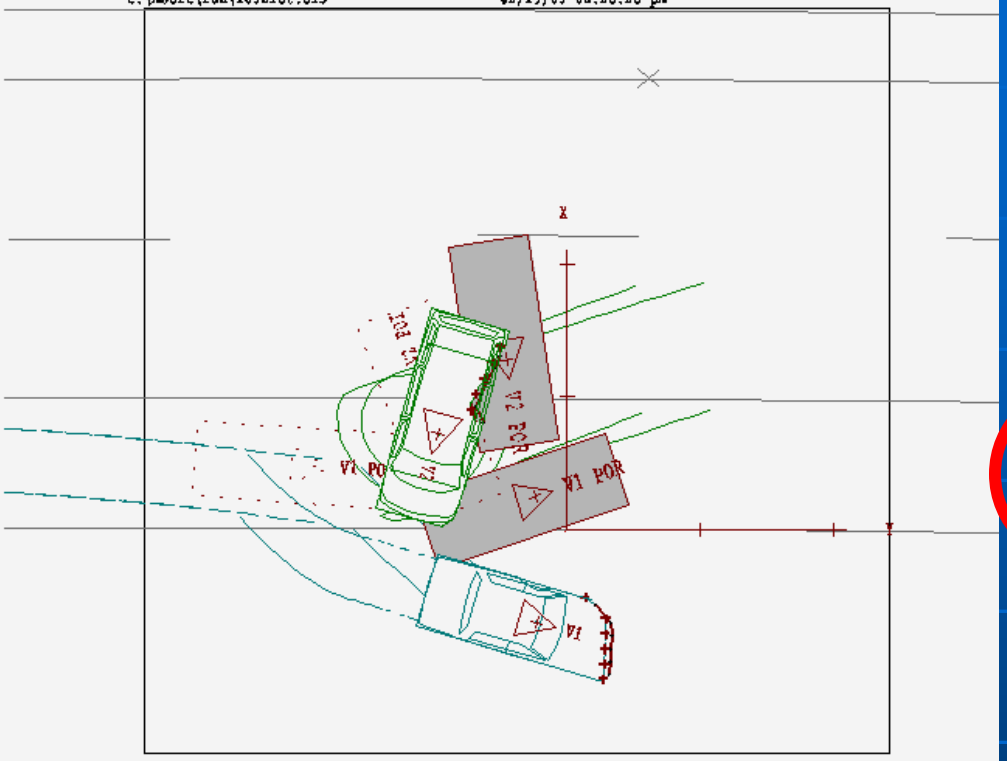

AXIS INTERVALS ARE 10. FEET

RECONSTRUCTED POSITIONS AND VELOCITIES AT IMPACT							DISPLAYED FINAL POSITIONS				VEHICLE DAMAGE INDICES	ΔV
Initial Contact f= 0.866	C.G. POSITION		HEADING				C.G. POSITION		HEADING	REMARKS		
	XC1	YC1	PS11	FWD	LATERAL	ANGULAR	XC1F	YC1F	PS11F			
	FT.	FT.	DEG.	MPH	MPH	DEG/SEC	FT.	FT.	DEG.			MPH
VEHICLE#1	3.3	-21.8	97.0	30.4	0.0	7.4	-7.0	-2.3	106.4	VEHICLE AT REST	1 1 F D E W 5	24.1
VEHICLE#2	7.9	-12.6	-15.2	-1.0	-13.7	-13.2	7.2	-9.8	-164.1	VEHICLE AT REST	D 9 L Z E W 3	16.9

m-smacgr v2002 ©McHenry Software,Inc.,Cary,NC USA

Graphic Display of Outputs of Accident Reconstruction
SMAC Collision & Trajectory

This copy Licensed to: Serl AFC03163
McHenry Consultants, Inc.,103 Brady Court,Cary, NC 27511

C:\msoft\run\18321st.si5 Preliminary SMAC analysis 02/19/03 02:28:28 pm

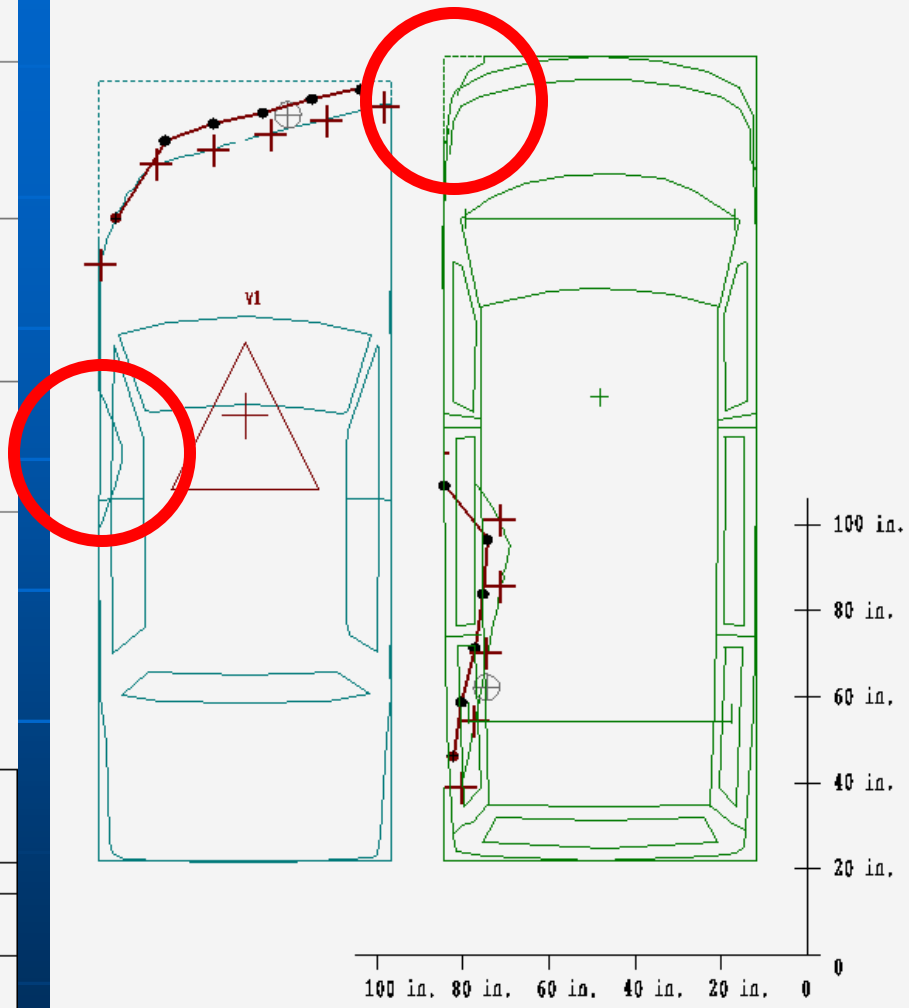

m-smacgr v2002 ©McHenry Software,Inc.,Cary,NC USA

SMACITER Test
with High Confidence Reconstruction

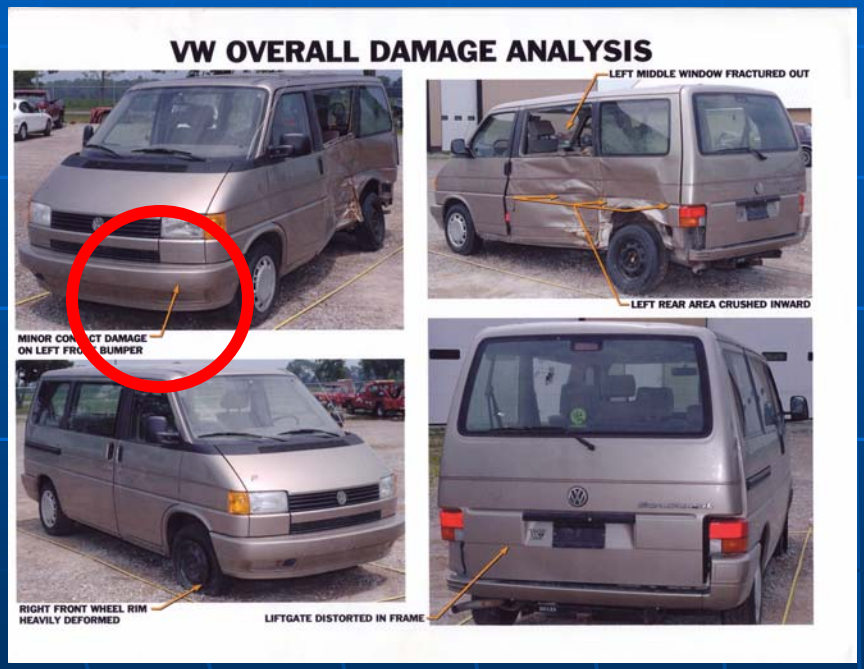

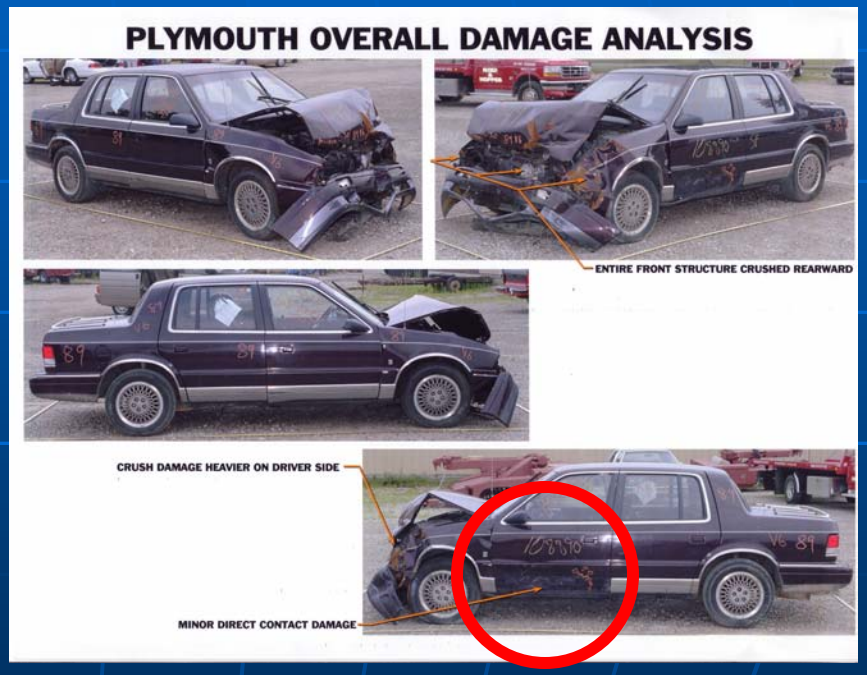

SMACITER

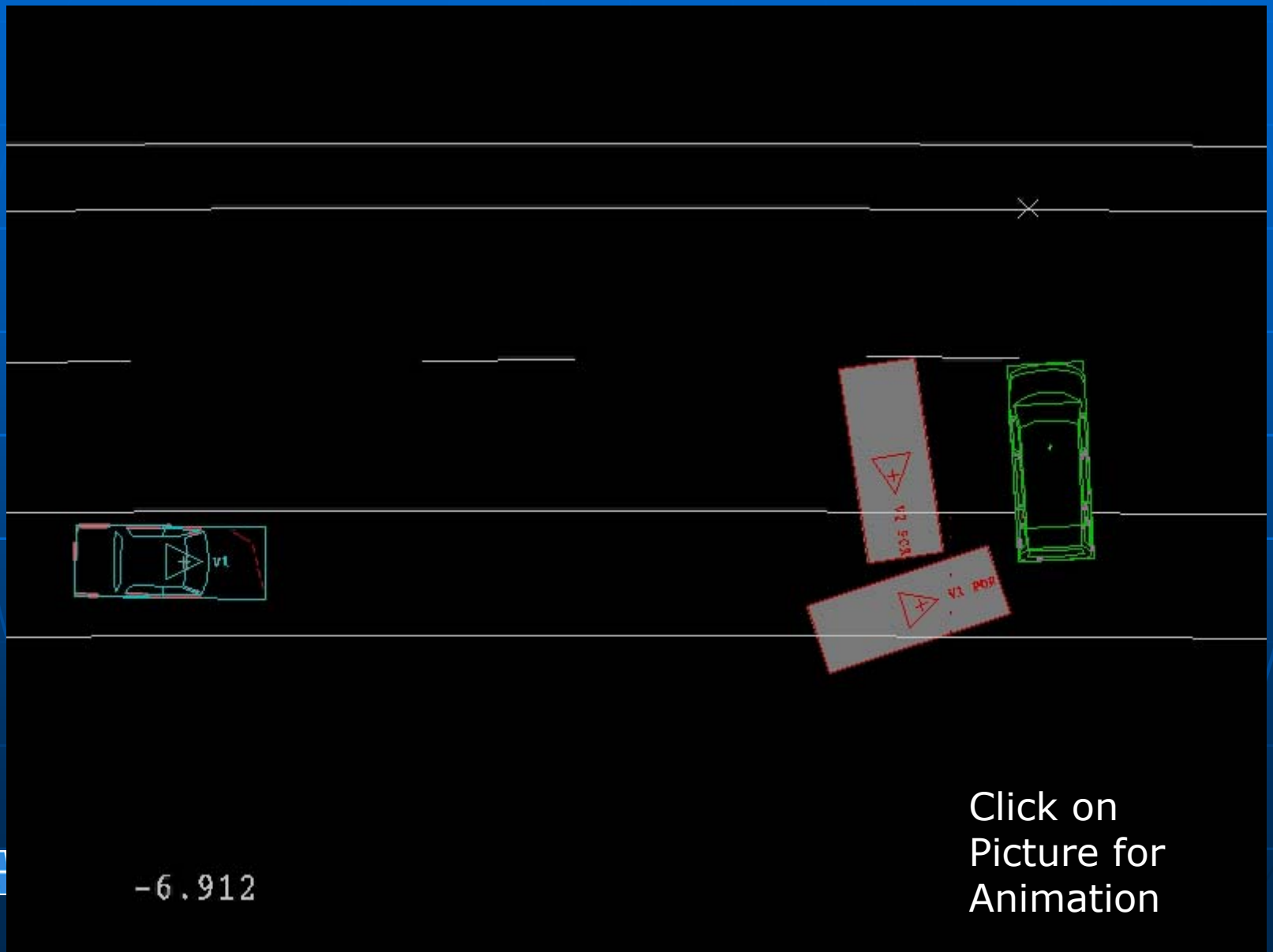

Click on Picture for Animation

Final Result

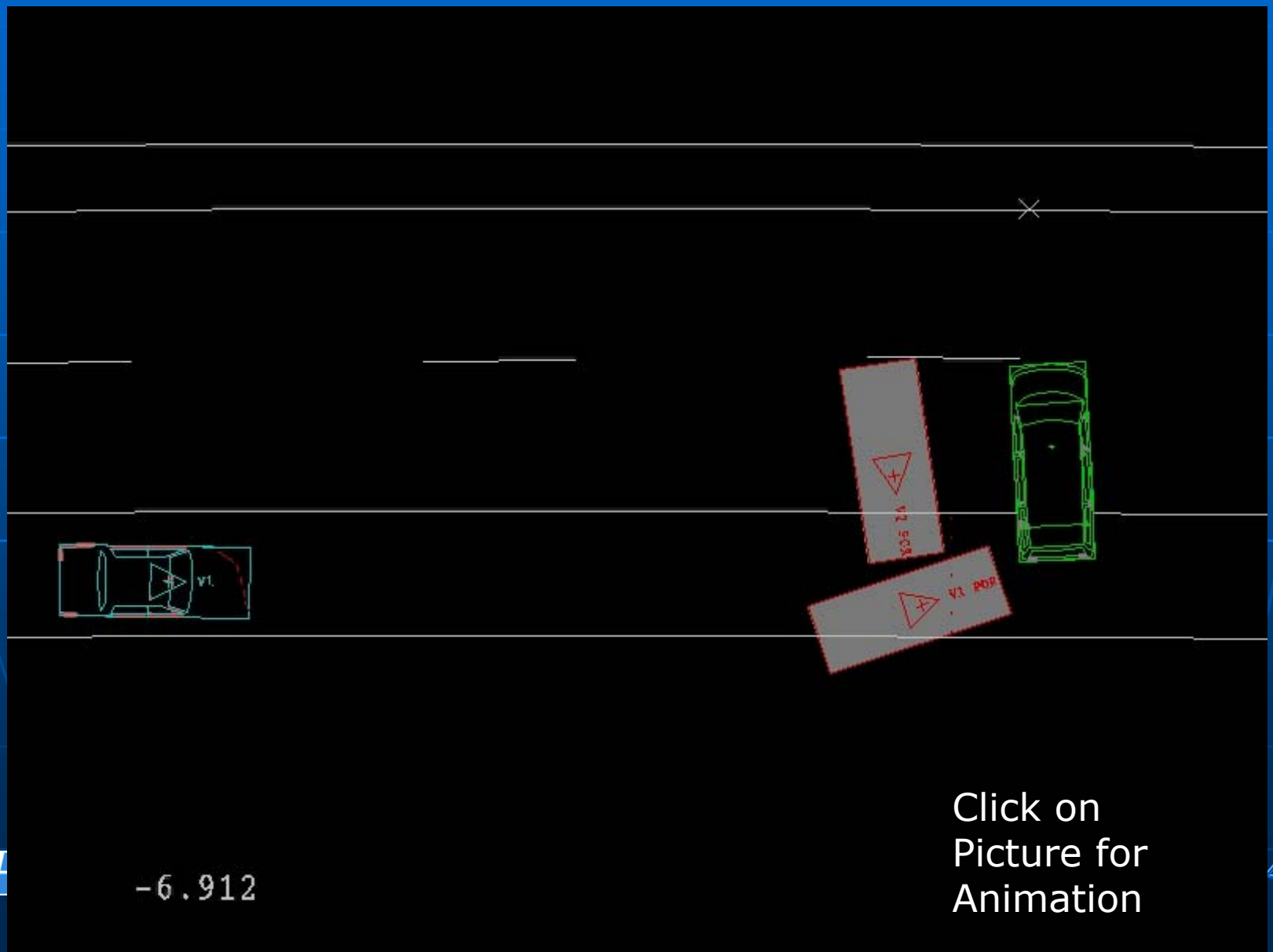

Click on Picture for Animation

Side-Slap Contact

Graphic Display of Outputs of Accident Reconstruction
SMAC Collision & Trajectory

This copy Licensed to: Serl AFC03163
McHenry Consultants, Inc.,103 Brady Court,Cary, NC 27511

C:\msoft\run\1832last.si5 Final SMAC analysis 02/19/03 01:34:38 pm

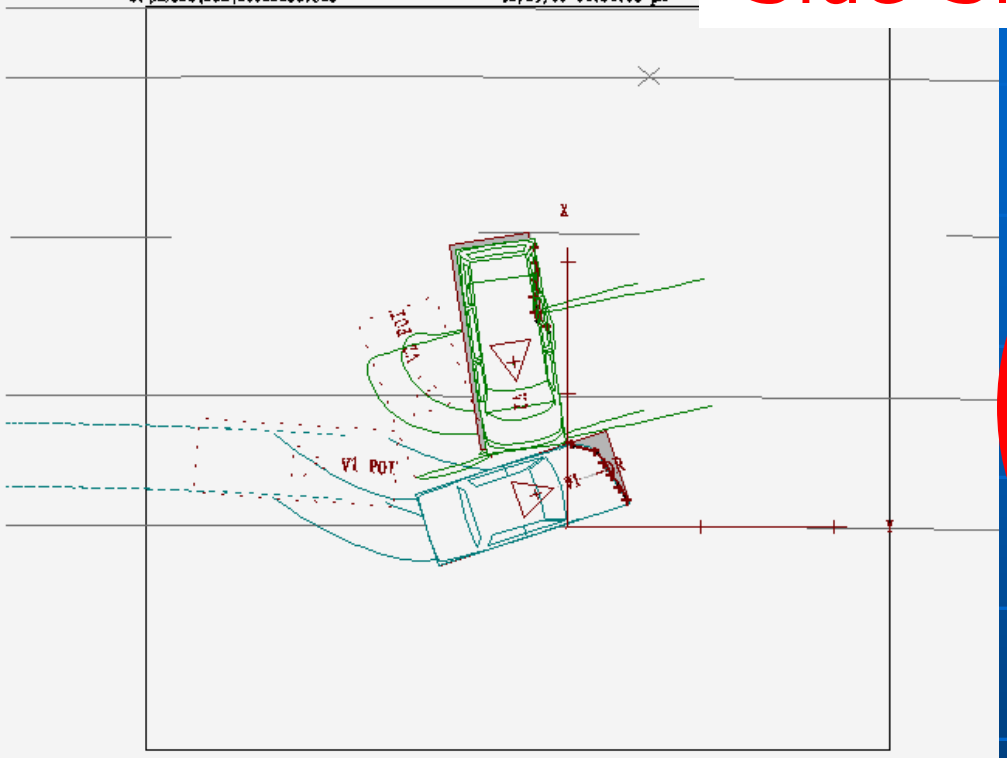

AXIS INTERVALS ARE 10. FEET

RECONSTRUCTED POSITIONS AND VELOCITIES AT IMPACT							DISPLAYED FINAL POSITIONS				VEHICLE DAMAGE INDICES	ΔV
Initial Contact t= 1.067	C.G. POSITION		HEADING				C.G. POSITION		HEADING	REMARKS		
	XC1	YC1	PS11	FWD	LATERAL	ANGULAR	XC1F	YC1F	PS11F			
	FT.	FT.	DEG.	MPH	MPH	DEG/SEC	FT.	FT.	DEG.			MPH
VEHICLE#1	4.6	-19.4	93.6	26.7	0.1	7.1	2.4	-2.4	72.0	VEHICLE AT REST	1 1 L Y E W 9	18.1
VEHICLE#2	19.5	-10.8	-19.3	0.8	-8.2	-13.5	12.4	-4.1	-188.6	VEHICLE AT REST	0 9 L Z E W 3	12.5

m-sanccr v2002 ©McHenry Software,Inc.,Cary,NC USA

Graphic Display of Outputs of Accident Reconstruction
SMAC Collision & Trajectory

This copy Licensed to: Serl AFC03163
27511

9 pm

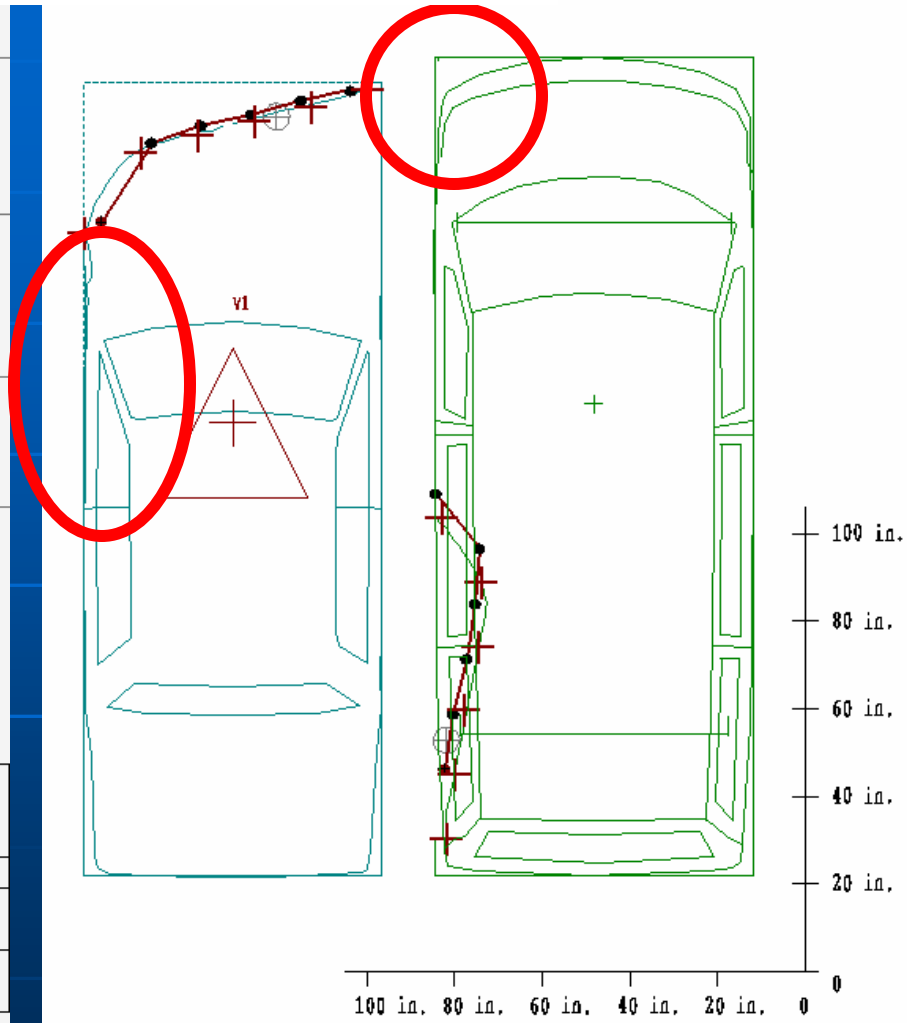

m-sanccr v2002 ©McHenry Software,Inc.,Cary,NC USA

SMAC2003
The Automatic Iteration of SMAC

- What is SMAC?
- Why Automatically Iterate SMAC?
- Prior Work
- Research Approach
- Results
- Discussion and Conclusions

Discussion and Conclusions

Impact Speed Correlation

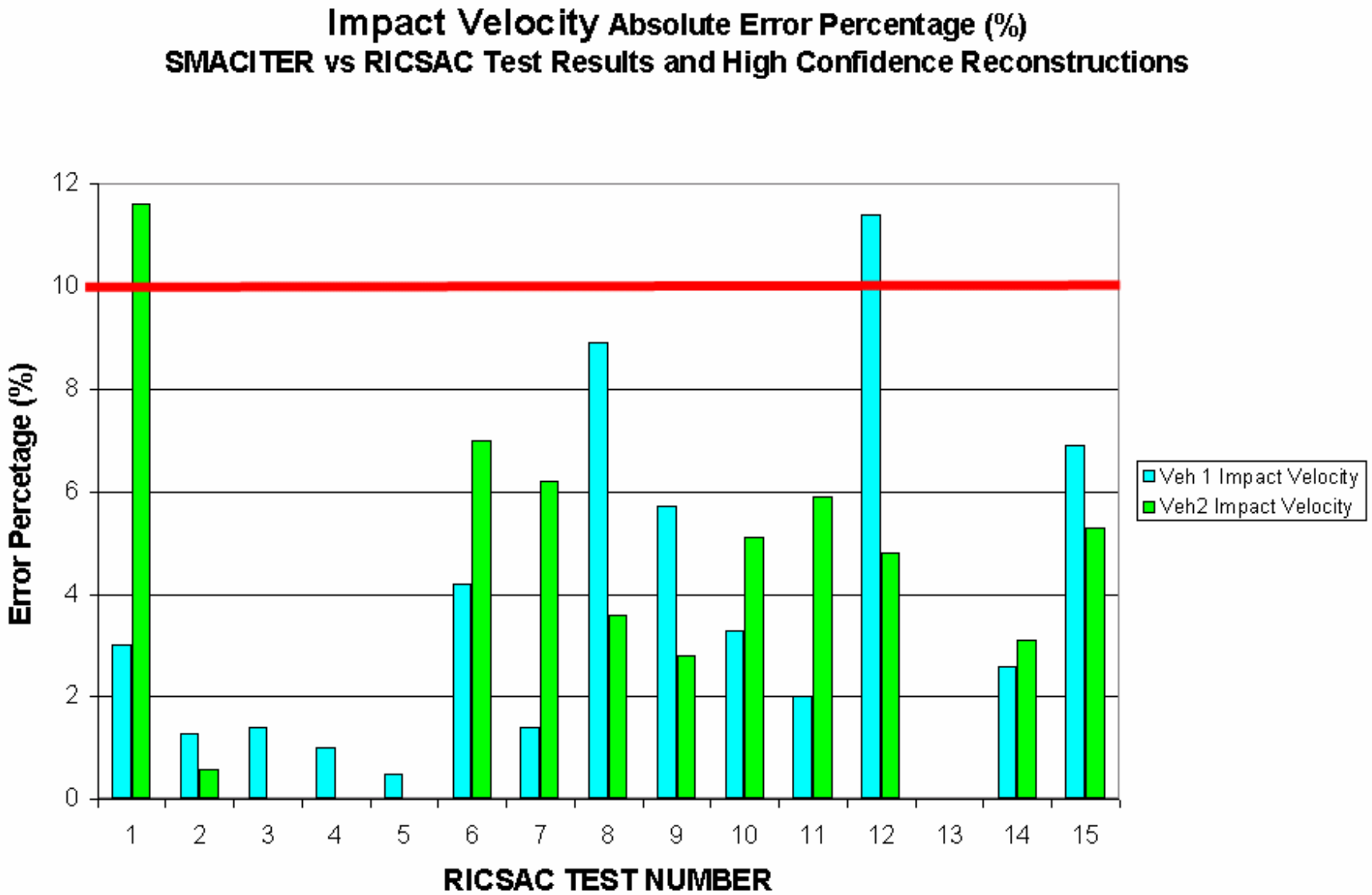

ΔV Correlation

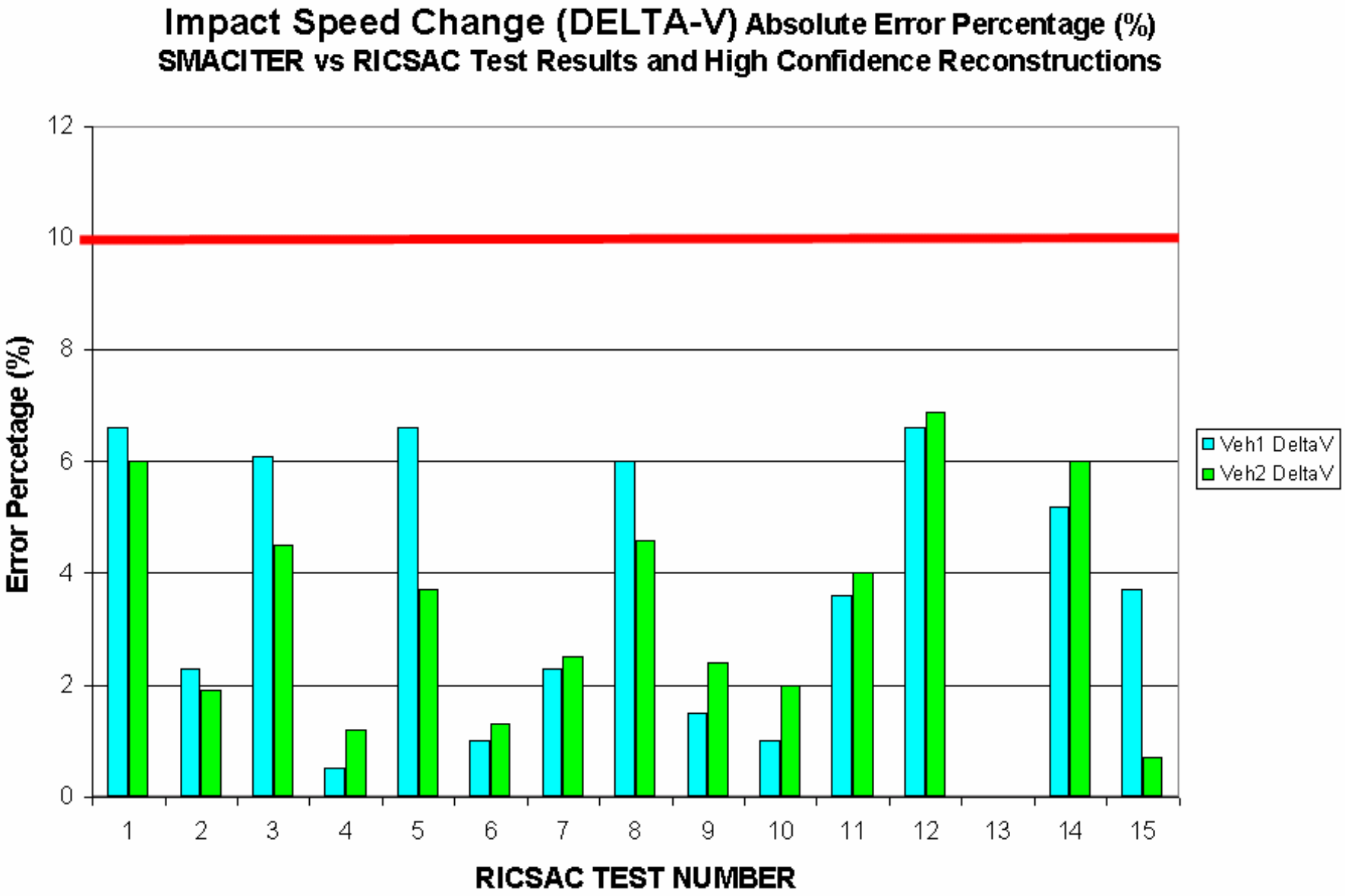

Correlation Factor v Error

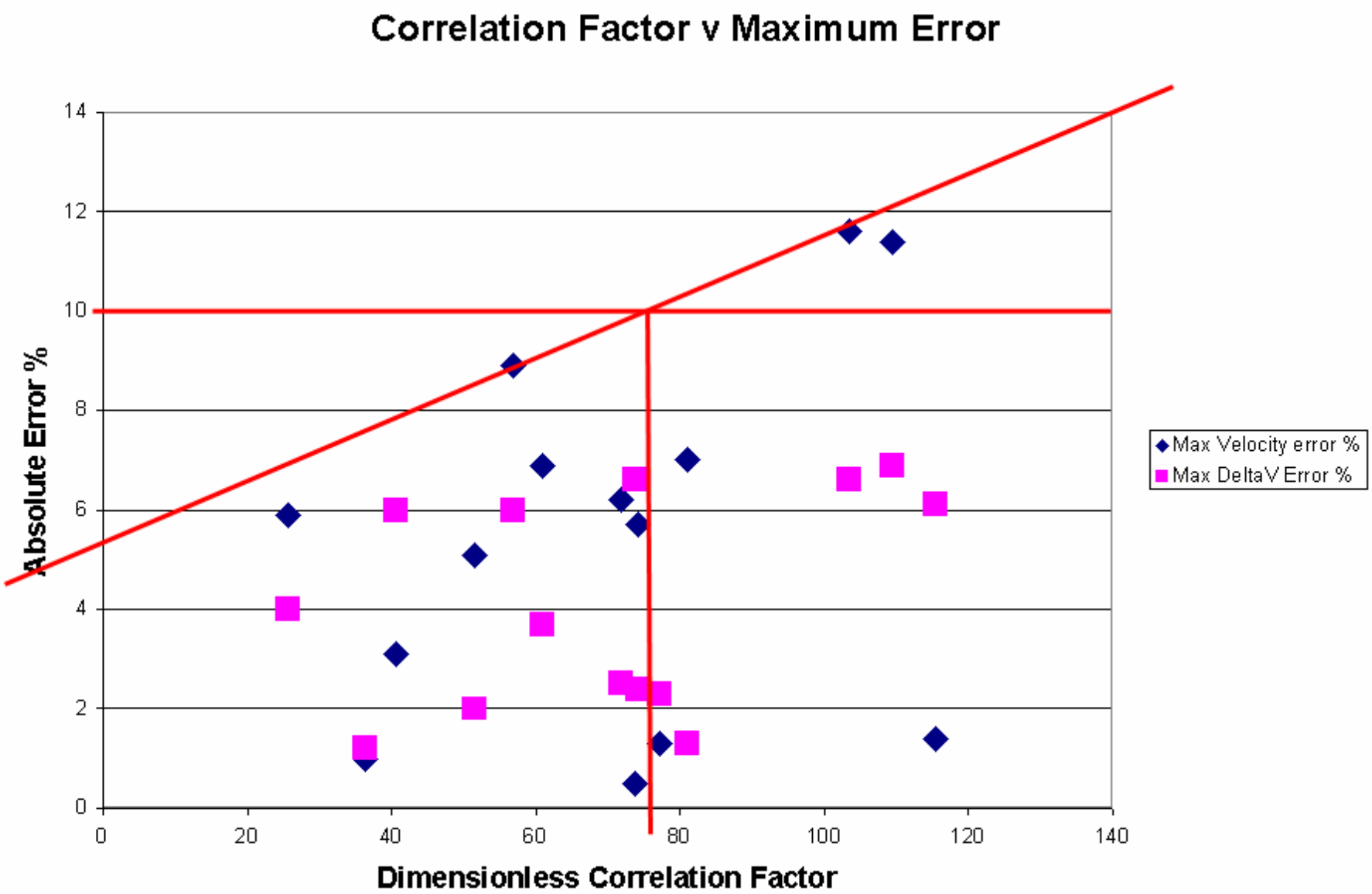

Discussion and Conclusions

- SMACITER is a tool to aid and assist an accident investigation
- Feasibility of the automatic iteration of SMAC has been demonstrated
  - This research represents the 1st validation of SMAC without using Impact Speed as input
- SMACITER converges towards evidence match
  - Yields impact velocities within ±12%
  - Yields ΔV's within ±8%

Discussion and Conclusions

- CRASH serves its original purpose as a pre-processor for SMAC
- A correlation factor or "score" is a desirable means of ranking the achieved match of evidence and thereby the quality and reliability of the reconstruction

SMAC2003
The Automatic Iteration of SMAC

- What is SMAC?
- Why Automatically Iterate SMAC?
- Prior Work
- Research Approach
- Results
- Discussion and Conclusions
- Future Plans

FUTURE PLANS

- Additional refinements of SMACITER
- Complete comparison of SMACITER with all available full-scale tests
- Further evaluation of a correlation factor or "score" as a potential measure of reconstruction accuracy
- Implementation of Restitution enhancements per SAE 970960
- 3D components – merging of 2 HVOSM vehicles with refined SMAC

End of Presentation

Thank you!