NATIONAL COOPERATIVE HIGHWAY RESEARCH PROGRAM
REPORT 36

HIGHWAY GUARDRAILS—A REVIEW OF CURRENT PRACTICE

HIGHWAY RESEARCH BOARD
NATIONAL RESEARCH COUNCIL
NATIONAL ACADEMY OF SCIENCES—NATIONAL ACADEMY OF ENGINEERING

NATIONAL COOPERATIVE HIGHWAY RESEARCH PROGRAM REPORT 36

HIGHWAY GUARDRAILS—A REVIEW OF CURRENT PRACTICE

NORMAN J. DELEYS AND RAYMOND R. McHENRY
CORNELL AERONAUTICAL LABORATORY
BUFFALO, NEW YORK

RESEARCH SPONSORED BY THE AMERICAN ASSOCIATION OF STATE HIGHWAY OFFICIALS IN COOPERATION WITH THE BUREAU OF PUBLIC ROADS

SUBJECT CLASSIFICATION:
HIGHWAY DESIGN
HIGHWAY SAFETY

HIGHWAY RESEARCH BOARD
DIVISION OF ENGINEERING NATIONAL RESEARCH COUNCIL
NATIONAL ACADEMY OF SCIENCES—NATIONAL ACADEMY OF ENGINEERING 1967

NATIONAL COOPERATIVE HIGHWAY RESEARCH PROGRAM

Systematic, well-designed research provides the most effective approach to the solution of many problems facing highway administrators and engineers. Often, highway problems are of local interest and can best be studied by highway departments individually or in cooperation with their state universities and others. However, the accelerating growth of highway transportation develops increasingly complex problems of wide interest to highway authorities. These problems are best studied through a coordinated program of cooperative research.

In recognition of these needs, the highway administrators of the American Association of State Highway Officials initiated in 1962 an objective national highway research program employing modern scientific techniques. This program is supported on a continuing basis by funds from participating member states of the Association and it receives the full cooperation and support of the Bureau of Public Roads, United States Department of Transportation.

The Highway Research Board of the National Academy of Sciences-National Research Council was requested by the Association to administer the research program because of the Board's recognized objectivity and understanding of modern research practices. The Board is uniquely suited for this purpose as: it maintains an extensive committee structure from which authorities on any highway transportation subject may be drawn; it possesses avenues of communications and cooperation with federal, state, and local governmental agencies, universities, and industry; its relationship to its parent organization, the National Academy of Sciences, a private, nonprofit institution, is an insurance of objectivity; it maintains a full-time research correlation staff of specialists in highway transportation matters to bring the findings of research directly to those who are in a position to use them.

The program is developed on the basis of research needs identified by chief administrators of the highway departments and by committees of AASHO. Each year, specific areas of research needs to be included in the program are proposed to the Academy and the Board by the American Association of State Highway Officials. Research projects to fulfill these needs are defined by the Board, and qualified research agencies are selected from those that have submitted proposals. Administration and surveillance of research contracts are responsibilities of the Academy and its Highway Research Board.

The needs for highway research are many, and the National Cooperative Highway Research Program can make significant contributions to the solution of highway transportation problems of mutual concern to many responsible groups. The program, however, is intended to complement rather than to substitute for or duplicate other highway research programs.

This report is one of a series of reports issued from a continuing research program conducted under a three-way agreement entered into in June 1962 by and among the National Academy of Sciences-National Research Council, the American Association of State Highway Officials, and the U. S. Bureau of Public Roads. Individual fiscal agreements are executed annually by the Academy-Research Council, the Bureau of Public Roads, and participating state highway departments, members of the American Association of State Highway Officials.

This report was prepared by the contracting research agency. It has been reviewed by the appropriate Advisory Panel for clarity, documentation, and fulfillment of the contract. It has been accepted by the Highway Research Board and published in the interest of an effectual dissemination of findings and their application in the formulation of policies, procedures, and practices in the subject problem area.

NCHRP Project 15-1 FY '66
NAS-NRC Publication 1540
Library of Congress Catalog Card Number: 67-60060

FOREWORD

By Staff

Highway Research Board

Engineers concerned with guardrail design and accident prevention will be those having most interest in this report. The research stemmed from a need for providing design engineers with a choice of effective guardrail systems and with warrants for their use. Toward this end, approximately six man-months of effort were devoted to an evaluation of existing data on the current state-of-the-art of guardrail design and warranting criteria with a view toward defining additional needed research. The results of the study are useful in providing both information essential to the conduct of additional research and a concise statement of national and international practices and current research.

Design engineers have been at a disadvantage for lack of a suitable basis for choice of effective guardrail systems (including median installations) and warrants for their use. Although a number of tests have been conducted on various systems, there has been a need for a comparison and appraisal of the resulting data in terms of structural stability of the systems, damage to vehicles, injury to occupants, maintenance and repairs, interference with roadway maintenance operations, visibility, etc. Similarly, a review of the basis for warrants has been needed.

The Cornell Aeronautical Laboratory has researched this problem by means of a combination of literature search and direct inquiries to numerous individuals and agencies in the United States and foreign countries. A review, summary, and evaluation of the present state-of-the-art has resulted and an extensive annotated bibliography of the reports and articles reviewed in the study has been developed. Throughout the review, primary attention was given to the consideration of three aspects pertaining to guardrails; i.e., (1) technical or factual basis for warrants, (2) prevailing conditions of off-road vehicle motions and guardrail impacts, and (3) criteria for guardrail structural design. Conclusions have been drawn concerning present gaps in the technology and recommendations have been made for the research considered necessary to fill these gaps. With the increasing emphasis being placed on highway safety, this compilation of pertinent information should be of considerable interest to both designers and other researchers.

This document constitutes a final report on the first phase of the research, which was intended to critically analyze past and current research and to define additional needed research. The second phase of the research will be under contract in June 1967.

CONTENTS

FIGURES

TABLES

ACKNOWLEDGMENTS

Norman J. DeLeys, Research Mechanical Engineer, and Raymond R. McHenry, Head, Engineering Mechanics Section, acted as co-principal investigators for the project described herein, performed by the Transportation Research Department of the Cornell Aeronautical Laboratory.

Appreciation is expressed to the many individuals and organizations, both in the United States and abroad, who supplied information in response to inquiries. Gratitude is especially expressed to the following, who supplied information reflected directly in the content of this report:

W. R. Bellis, New Jersey State Highway Dept.; F. Bitzl, Institut für Strassenbau und Strassenverkehr, Vienna, Austria; D. O. Cargill, Dept. of Public Works, Providence, R. I.; J. W. Clingerman, United States Steel Corp.; G. F. Colabich, University of Padua, Italy; M. Fujita, Japan Steel & Tube Corp., Tokyo, Japan; M. D. Graham, New York State Dept. of Public Works; H. Grob, Institut für Strassen und Untertagbau, Zurich, Switzerland; G. G. Hénault, The Warnock Hersey Company, Montreal, Quebec; T. S. Huff, Texas Highway Dept.; V. J. Jehu, Road Research Laboratory, Harmondsworth, Middlesex, England; M. P. Jurkat, Stevens Institute of Technology; G. Kullberg, National Road Research Inst., Stockholm, Sweden; N. E. Manasseh, American University of Beirut, Beirut, Republic of Lebanon; W. McMullen, Reynolds Metal Co.; R. G. Mitchell, Connecticut State Highway Dept.; E. F. Nordlin, California Division of Highways; E. Padberg, Studiengesellschaft für Stahlleitplanken E.V., West Germany; F. Peinell, Christiani and Nielsen, London, England; F. N. Platt, Ford Motor Co.; C. W. Prisk, U.S. Dept. of Commerce; E. R. Ricker, Pennsylvania Dept. of Highways; N. J. Rowan, Texas A&M University; W. A. Rusch, International Bridge, Tunnel and Turnpike Assn.; P. C. Skeels, General Motors Corp.; V. E. Staff, Illinois Dept. of Public Works and Buildings; R. Stemler, Aluminum Company of America; J. J. Syrnyk, Dept. of Highways and Transportation, Saskatchewan; Vianini-Societa per Azioni, Roma, Italy; and J. C. Womack, California Division of Highways.

HIGHWAY GUARDRAILS—A REVIEW OF CURRENT PRACTICE

SUMMARY

This final report presents the results of a study to review, summarize and evaluate the current state of the art of guardrail design and warranting criteria. Information necessary for the conduct of the investigation was secured from a search of the technical literature and by correspondence with individuals and agencies both in the United States and abroad. The report presents and discusses data and information concerning present warranting practices, prevailing conditions of off-road vehicle motions, and guardrail performance as determined from accident studies, structural and physical characteristics of various types of guardrails in current use, results of full-scale barrier tests, and research programs currently in progress.

It is concluded that there is a need for additional research in the areas of (1) more comprehensive accident data specifically aimed at providing a realistic assessment of performance of current barrier installations by relating unsuccessful barrier performance to the over-all contact experience, identifying predominant failure modes and impact conditions, and obtaining measures of relative hazards of roadside obstacles and guardrails; (2) development of standardized test procedures, measurements, and reporting of results; and (3) development and application of validated analytical techniques for studying and evaluating guardrail collision dynamics to determine the relative importance of barrier design parameters and to provide guidance for design modifications. A preliminary proposal for conducting the additional needed research is outlined.

An extensive annotated bibliography of reports and articles reviewed in the study is presented in an appendix.

CHAPTER ONE

INTRODUCTION

There is a need to provide highway design engineers with a choice of effective guardrail systems (including median installations) and warrants for their use. Although a number of agencies have conducted tests of various systems, the resulting data need to be compared and appraised in terms of structural stability, damage to vehicles, injury to occupants, maintenance and repair, interference with roadway maintenance operation, visibility, etc. A similar review of the basis for warrants is needed.

The foregoing paragraph is the problem statement for the Phase I studies of NCHRP Project 15-1 performed by the Cornell Aeronautical Laboratory. The results, consisting of a review, summary and evaluation of the present state of the art of highway guardrail design and warranting criteria, are presented in this report. The scope of this investigation was limited primarily to considerations of three aspects of guardrails: (1) technical or factual basis for warrants, (2) prevailing conditions of off-road vehicle motions and guardrail impacts, and (3) criteria for guardrail structural design. The primary objectives of the study were

(1) to search for, summarize and critically evaluate existing data on guardrail design, performance, and warrants, and (2) to define needs for additional research effort.

To obtain the information required to present and assess the current state of the art of guardrails, a literature search was made and letters of inquiry were sent to more than 150 individuals and agencies, both in the United States and in foreign countries, asking for statistical and experimental data, descriptions of past and current research, bibliographies, and expert opinions related to the aforementioned three aspects of guardrails. A large amount of material was obtained through approximately 100 responses to the request for information, much of it being drawings showing guardrail standards and details of current warranting practice. Because the study program was not intended to include a treatment of the many detailed differences in current design practice among the various States and foreign countries, no attempt was made to catalogue or evaluate all of this type of information.

This report presents as complete a review of data concerned with guardrail design and performance, warrants, vehicle impact conditions, and research currently in progress as was possible to achieve within the time period permitted for the study. In addition to the material presented in the main body of the report, an annotated bibliography of reports and articles related to the subject of guardrails is given in the Appendix.

CHAPTER TWO

RESULTS OF THE STUDY

FACTUAL BASIS FOR GUARDRAIL WARRANTS

There is considerable agreement among highway engineers concerning the considerations that are involved in establishing the need for guardrail installation. The primary factors usually considered are embankment height, fill slope, shoulder width, steepness of grade, horizontal curvature, roadside conditions (such as fixed objects, bodies of water, rocks, and boulders), climatic conditions, traffic characteristics (speed and volume) of the highway, and accident experience. It is also universally recognized that, insofar as possible, roads should be designed so as to minimize the need for guardrails, because guardrails are themselves hazardous and may be more dangerous than the hazard they are designed to protect against (*1, 2*).

In the United States, many of the States have adopted the procedure outlined in HRB Special Report 81 (*3*), or some variation thereof, as a guide for warrants. This procedure is based on the current practice of most of the States in dealing with the need for guardrails on embankments; there is widespread agreement that no guardrail is needed if the fill slope is flatter than 4:1 and no other hazards are present. To each combination of embankment height and steepness of the side slope (less than 4:1) a value of basic "need index" is assigned. Adjustment factors are then applied to the basic need index to account for the other factors that affect the need as listed previously. The resulting adjusted need index is then compared to an appropriate warranting value assigned to the highway that should take into consideration the type of highway (primary or secondary) and the associated speed and volume of traffic. The need for a guardrail is indicated if the numerical value of the adjusted need index is larger than the warranting value. A nomograph that was developed to simplify the procedure is presented in Figure 1 (*3*, p. 7).

The procedure has merit in that it attempts to account properly for the many variables that affect the determination of need. Despite the fact that the appropriateness of the values assigned to both the basic need index and the adjustment factors (which in effect define the relative hazard relationships within and among the variables) may be subject to question, the method reflects both the best available knowledge and the judgment of experienced designers for guidance in determining when a guardrail is needed. The report also points out the need for protection against such potential hazards as bridge abutments, piers, and light poles, and presents recommendations as to how guardrails should be installed geometrically to reduce the danger from these and other hazardous conditions.

The relatively sparse applicable information that was obtained from foreign countries also indicates the need for a more specific, valid definition of when guardrail installation is warranted. A brief review of practice in the United Kingdom, Japan, Canada, and Switzerland follows.

United Kingdom

According to Jehu (*4*), of the Road Research Laboratory:

> At the moment the warrant for roadside barriers on motorways in the U.K. is an embankment height of 20 ft or more, embankments 10 ft or more in height on curves with a radius of 2,800 ft or less, and at points of special danger (e.g., on all bridges carrying a motorway and on all bridges carrying vehicular traffic over a motorway). Warrants for median barrier are under investigation by comparing accident records at two 9-mile sites with barrier with equal length controls on the same road without barrier, the median width being 15 ft.

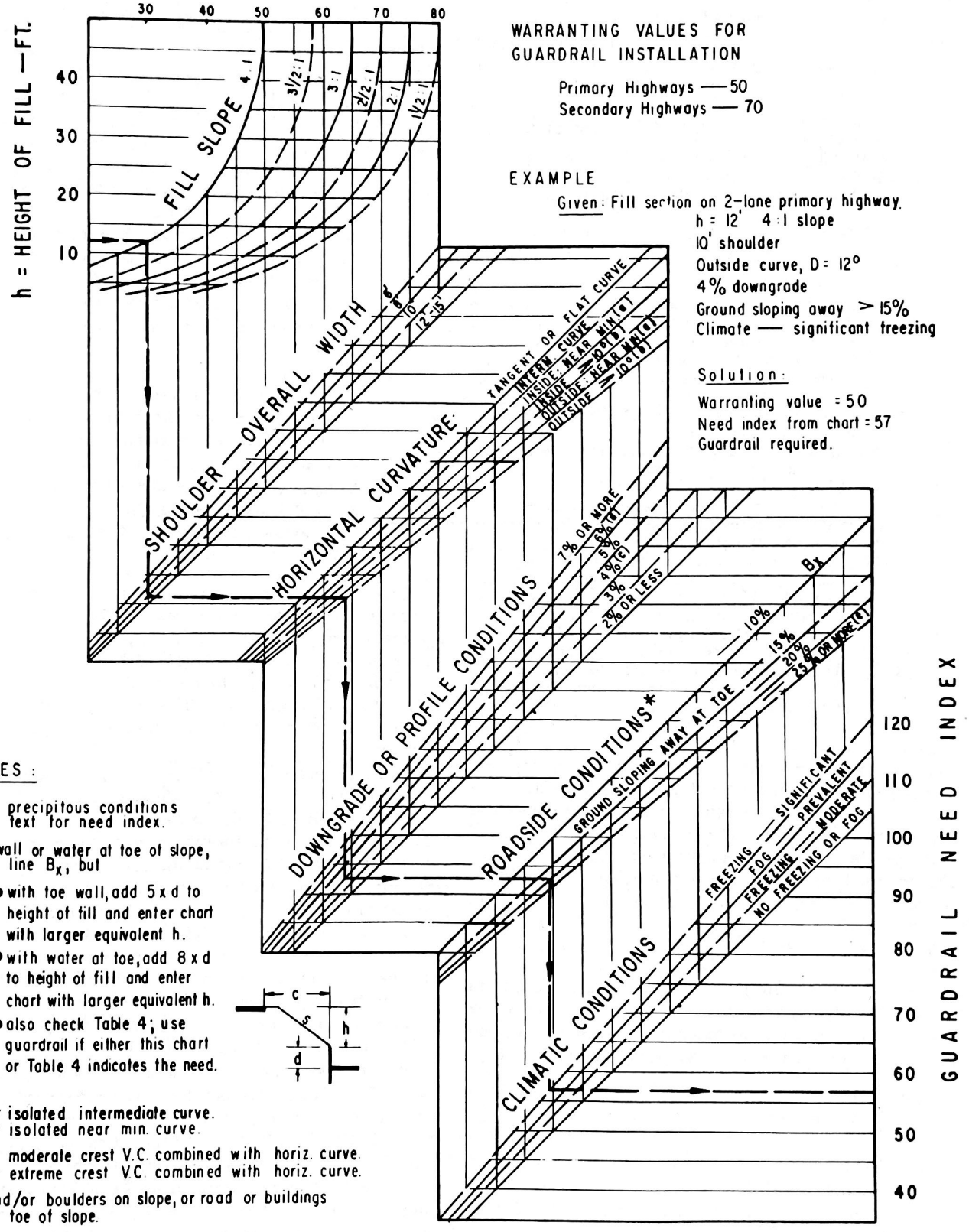

Figure 1. Guardrail need index chart.

Japan

Members of a committee of the Japan Road Association have prepared a guidebook (*5*) that is similar to HRB Special Report 81 in that it provides a guide for the determination of need, installation recommendations, and the classes of roads where various types of guardrail may be used. The following excerpts of definitive conditions for guardrail warrants are quoted from an incomplete copy of this document.

> In general, guardfence is to be erected at each of the sections stated below to prevent cars from running off roads by taking into consideration the conditions of and the traffic situation on the road.
>
> (3) Section where the height of embankment is more than 2 m in city districts.
>
> (4) Section where the height of embankment is more than 2 m and the radius of curvature is less than 300 m in flat and mountainous districts.
>
> (6) Secton where the surface of the road is less than 1.5 m lower than that of a railway or another road and net clearance (clearance between the outer edge of the construction gauge on the road and that of the railway or other way) is less than 5 m and there is danger that a car may run off the road onto the railway or other way.
>
> (9) Section where an S-shape curve exists on a road with radius of curvature less than 300 m.
>
> (10) Section where less than 4% down slope exists and guardfence can be used effectively for such a place.
>
> (13) Section where bridge, elevated bridge or tunnel begins or ends and guardfence may be considered as especially needed.
>
> (14) Section where guardfence is considered especially as needed for the protection of, for instance, the pillars of an overhead bridge.
>
> (16) Section where the width of the central separating zone is less than 3 m and guardfence may be considered as needed.

Canada

The Department of Highways of the Province of Saskatchewan, Canada, employs the nomograph shown in Figure 2 as a guideline for warrants. The similarity to the nomograph developed by the HRB Committee may be seen. It may also be noted that this nomograph provides for consideration of design speed of the highway and the length of fill.

Switzerland

In Switzerland, the Institute of Road and Underground Construction of the Swiss Federal Institute of Technology has recommended warrants based on the existing road and traffic conditions in that country. According to Balz (*6*):

1. Guardrail is not required:
   (a) On embankments shorter than 150 ft.
   (b) On roadways where the traffic volume is less than 10,000 ADT or where driving conditions are good without risk below an average speed of 40-45 mph unless there is a situation described in 2(d).
2. Crash barriers are (with reference to the general requirement of need) only to be installed in cases described as follows:
   (a) On retaining walls and bridges, if their height exceeds 6 ft.
   (b) On roadways located along railway lines or watercourses with depths of more than 3 ft, if the distance between them is less than 30 ft. If the railway line or the watercourse is at the bottom of a fill with a slope steeper than 3:1, guardrails should be installed, even though the distance exceeds 30 ft.
   (c) Large-size obstacles (like houses) closer than 30 ft to the roadway, fills and cuts and also watercourses (if more than 3 ft deep) running perpendicularly to the roadway, need to be screened 150-200 ft before the obstacle commences.
   Single small-size obstances, like trees, semaphores, sign supports, are not to be protected by crash barriers. Trees should not be closer than 30 ft to the roadway and sign supports should be designed so that they may be easily knocked down (changeable supports).
   (d) On curves
   — if the radius of a curve is smaller than the prescribed minimum for the design-speed,
   — if the curve is exceptionally long,
   — if the roadway is covered with sleet.
   (e) Along median strips of divided highways.
   (f) Along fills on divided highways when the height of fill exceeds 12 ft or the slopes are steeper than 3:2.

From the foregoing discussion of warrant practices, it is clear that the need for guardrail is, of necessity, based primarily on judgment that is tempered by practical experience gained over the years and hence there are many and varied opinions as to the conditions that justify the installation of a guardrail. This will undoubtedly always be the case, for there is usually no clearcut "yes" or "no" answer.

The crux of the problem faced by the highway engineer when posed the question, "When is the installation of guardrail warranted?" lies in the answer that basically defines its purpose. The answer, at least in part, may be correctly stated as: "Whenever the consequences of vehicles leaving the roadway are hazardous and would be more severe or damaging than those that would prevail if guardrail were to be installed." The key words are "whenever" and "hazardous" and the foregoing statement implies that as guardrail performance is improved, the need for guardrails increases; i.e., hazards that formerly did not warrant the installation of a guardrail become relatively more hazardous as better guardrails are developed.

At the present time there is a need for a more factual or scientific basis for warrants. Such a basis for warrants must include consideration of the relative hazards of specific roadside features and the various configurations of barriers under the prevailing conditions of vehicle operation (i.e., speed, density, probable frequency of accidents, etc.) and in view of the mixture of vehicle weights and sizes. It would seem that this problem could be approached from the view-

NOTE:

1. S = SEVERITY INDEX
2. THE SEVERITY INDEX MAY BE INCREASED BY A MAX OF 20 POINTS FOR THE FOLLOWING FACTORS:
   - WATER, OVER 6' IN DEPTH, ADJACENT TO THE FILL
   - A JAGGED ROCK FILL
   - BUILDINGS WITHIN 20' OF THE BASE OF THE FILL
   - PEDESTRIAN VOLUMES GREATER THAN 500 PER DAY WITHIN 20' OF THE BASE OF THE FILL.
   - TRAFFIC VOLUMES GREATER THAN 500 ADT WITHIN 20' OF THE BASE OF THE FILL
3. THE SEVERITY INDEX MAY BE INCREASED BY A MAX OF 10 POINTS FOR THE FOLLOWING FACTORS
   - DANGEROUS ICING CONDITIONS
   - INSUFFICIENT OR UNIFORM SUPERELEVATION
   - POOR VISIBILITY OF DANGER AREA

EXAMPLE

(a) GIVEN:

1. DESIGN SPEED = 50 MPH, DEGREE OF CURVATURE = 10°
   PRESENT ADT = 50, AVERAGE % GRADE = 2%
   SIDE SLOPE = 1.5:1
   SHOULDER WIDTH = 1' (BASED ON 11' LANES)
   LENGTH OF FILL = 100', AVERAGE HEIGHT OF FILL = 10'

(b) PROCEDURE:

1. START WITH THE "DESIGN SPEED" (50 MPH) ON THE TOP LINE OF THE NOMOGRAPH.
2. USE A STRAIGHT LINE TO JOIN THIS POINT WITH THE "DEGREE OF CURVE" (10°) AND EXTEND TO INTERSECT THE FIRST TURNING LINE.
3. CONTINUE IN THIS MANNER WITH STRAIGHT LINES, FROM ONE TURNING LINE TO THE NEXT, TO THE BOTTOM OF THE NOMOGRAPH WHERE THE WARRANT FOR GUARD RAIL AND DELINEATORS IS GIVEN.
4. IN THIS EXAMPLE DELINEATORS ARE REQUIRED.

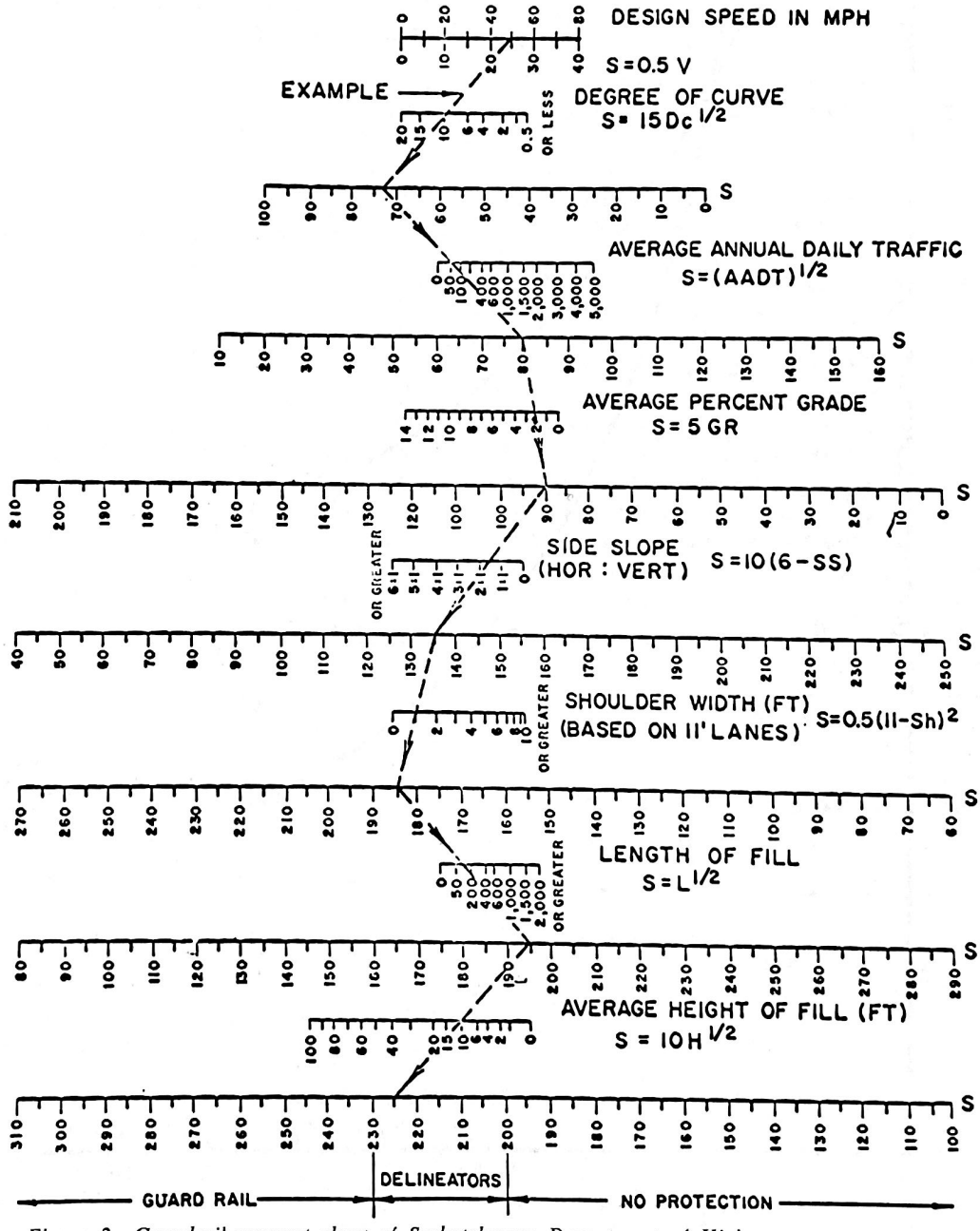

Figure 2. Guardrail warrant chart of Saskatchewan Department of Highways.

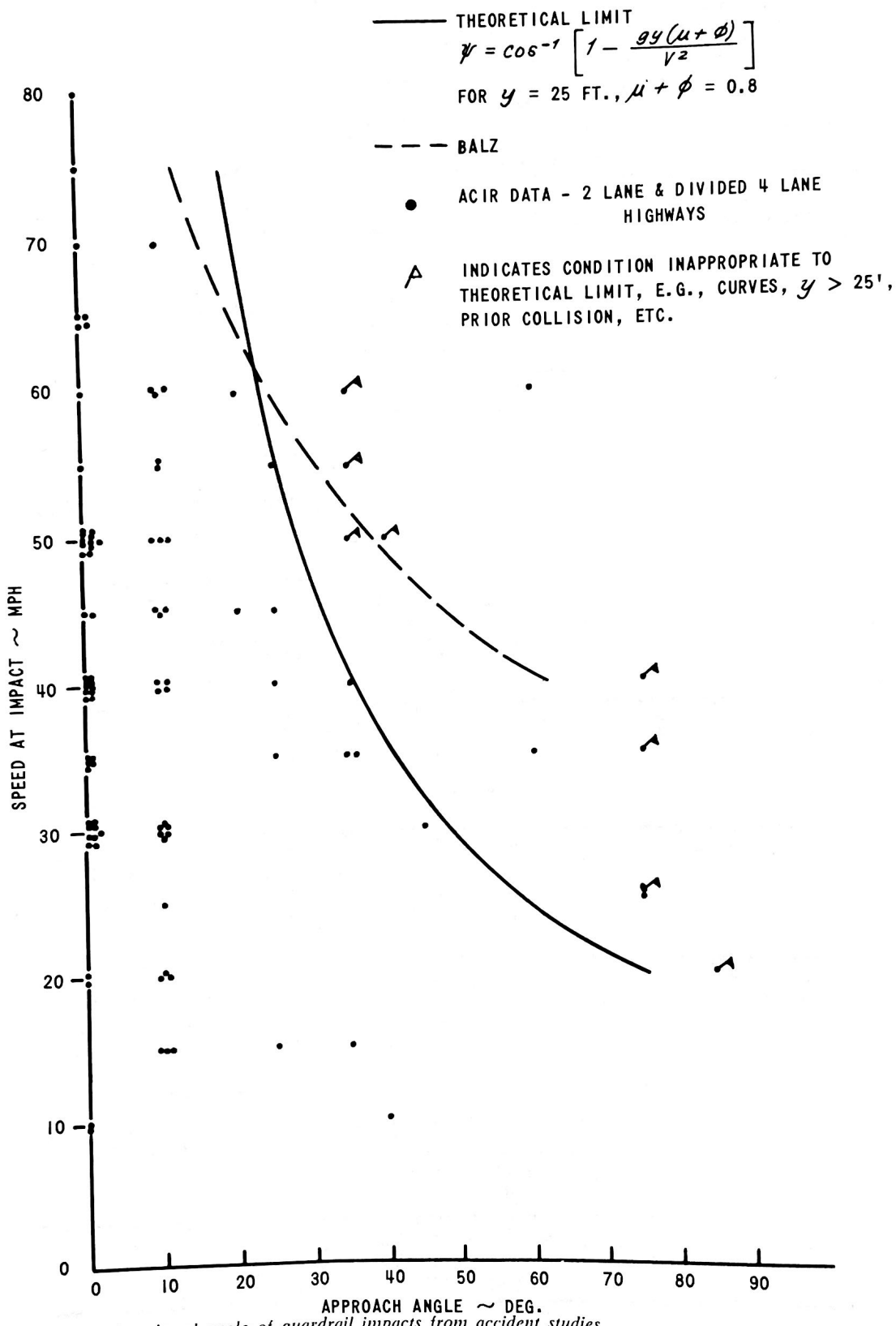

Figure 3. Speed and angle of guardrail impacts from accident studies.

points of (1) accident statistics and the results of staged accidents (i.e., statistical and experimental measures of hazards), and (2) analysis of the dynamics of vehicles that (a) encounter roadside objects, and (b) impact guardrails.

ACCIDENT STUDIES

Many different types or classes of highway are in use today, ranging from the low- to medimum-speed rural and urban roads to multiple-lane divided or undivided high-speed highways and expressways found in the Interstate System and in metropolitan areas. Clearly, the guardrail performance requirements as related to the different traffic and geometric characteristics of the various types of roads are variable and establishment of guardrail design criteria requires a definition of the prevailing conditions of vehicle off-road movement for the various types of road.

A number of investigations of actual accidents have been conducted for the purpose of gathering statistical data on accident causation, frequency of occurrence, injury and fatality rates, median encroachments, etc. These reported studies were reviewed for information on the prevailing conditions of off-road vehicle motions and actual barrier impacts (i.e., speed, path angle, and heading angle of the vehicle), and also on the performance of existing guardrails to determine the predominant modes of failure. In addition, some data were extracted from a limited survey of the Automotive Crash Injury Research (ACIR) files of the Cornell Aeronautical Laboratory.

Data from the ACIR files are shown in Figure 3 for about 120 accidents involving guardrails on two-lane roads and four-lane divided highways. The impact speed and angles shown are based on information from accident reports and photographs of the accident scene obtained from law enforcement officers in the various States cooperating with the Cornell Aeronautical Laboratory by furnishing data on injury-producing accidents.

For a vehicle initially traveling parallel to a guardrail there is a maximum angle at which the vehicle can impact it (i.e., the angle between the direction of motion of the center of gravity of the vehicle, as opposed to its direction of heading, and the longitudinal centerline of the undeflected barrier) that depends on the vehicle speed, the friction coefficient between the tires and the road surface, and the lateral distance from the barrier.

This relationship, derived elsewhere (*7, 8, 9*), is

$$\psi = \cos^{-1}\left[1 - \frac{gy(\mu + \phi)}{V^2}\right] \qquad (1)$$

in which

$\psi =$ impact angle, in degrees;

$y =$ initial lateral distance from the barrier, in feet;

$V =$ vehicle speed in feet per second;

$g =$ acceleration of gravity, in feet per second per second;

$\mu =$ friction coefficient between tires and road; and

$\phi =$ road camber or superelevation, in radius.

Eq. 1 is based on the assumption that the vehicle is initially traveling parallel to the barrier on a straight road and subsequently turns into the barrier on a constant minimum radius path (at the speed being considered) that is determined by equilibrium of lateral forces on the vehicle (centrifugal and tire friction forces) for incipient skidding.

The curve depicting this speed-impact angle relationship for values of $\mu + \phi = 0.8$ and $y = 25$ ft is also shown in Figure 3. These values are representative for a dry two-lane road or four-lane divided highway on which the vehicle might cross one lane and a wide shoulder before striking the guardrail. It may be seen that this theoretical curve fairly well defines the envelope of ACIR data points. The majority of the points above and to the right of the curve may be explained on the basis of factors for which the theoretical curve does not apply, such as lateral offsets greater than 25 ft, curved road, impact with guardrail at an intersection, rebound from prior impacts, and blowouts.

A summary of guardrail performance for the ACIR

TABLE 1

BARRIER PERFORMANCE FROM SAMPLE ACIR DATA FOR TWO-LANE AND FOUR-LANE-DIVIDED HIGHWAYS

	NUMBER OF COLLISIONS WITH					
BARRIER PERFORMANCE	2-CABLE TYPE	3-CABLE TYPE	4-CABLE TYPE	W-SECTION TYPE	OTHER	ALL
Successful	4	1	3	11	11	30
Principal Mode of Failure:						
End impact [a]	1	2	1	33	13	50
Penetrated	2	0	0	2	11	15
Pocketed	1	1	0	5	0	7
Snagged vehicle	1	1	2	2	0	6
Vehicle roll-over	1	0	0	2	1	4
High reflection	1	2	0	6	5	14

[a] With or without vehicle roll-over.

cases is given in Table 1, which indicates that a surprisingly large number of impacts (50 percent of the total failures) occurred on the end of the guardrail. The next most prevalent failure modes were vehicles penetrating or vaulting over the guardrail or being reflected back onto the highway at high angles. However, a comparison of the number of times the barriers performed successfully versus the number of failures is, as in all data found in the literature in this regard, not a valid indication of the present state of the art of guardrail performance because the number of times vehicles strike guardrails and are successfully returned to the highway or otherwise go unreported is unknown. It should be noted that the ACIR data include only injury-producing accidents.

TABLE 2

1964 NEW YORK STATE THRUWAY REPORTED GUARDRAIL ACCIDENTS [a]

ITEM	NO. OF ACCIDENTS
Type of rail:	
Guiderail:	
Cable	45
Beam	150
Blocked-out beam	9
Unreported or other	2
Median barrier:	
Single post, double beam	10
Single post, blocked-out double beam	44
Double post, beam	5
All types	265
Lanes crossed in approach to barrier:	
Right turn into barrier	167
Cross one lane right	5
Cross two or more lanes right	3
Left turn into barrier	3
Cross one lane left	76
Cross two or more lanes left	11
All types	265
Vehicle reaction:	
Vehicle hits end of barrier	10
Vehicle goes through barrier	20
Vehicle goes over barrier	22
Vehicle rolls over outside of barrier	7
Vehicle rebounds off barrier	119
Vehicle slides to stop along barrier	41
Vehicle rotates but does not roll over after striking barrier	37
Vehicle straddles rail	4
Unreported or other	5
All types	265
Vehicle speed: [b]	
0-34 mph	57
35-49 mph	77
50-64 mph	105
65 mph or more	14
Unreported	12
All	265

[a] Data provided by Bureau of Physical Research, New York State Dept. of Public Work.
[b] Estimate of driver or reporting officer.

Results of accident investigations of 70 collisions with metal guardrails in Switzerland are reported by Balz (*10, 11*). Limiting conditions of speed and impact angles determined from these studies are also shown in Figure 3, but the type of road(s) for which the accident data were obtained is not reported. Of the 70 accidents, 15 were end impacts, 52 were lateral collisions with the rail, and 3 were impacts in which the vehicles got behind and struck the rear side of the rail. Of the 52 lateral collisions, 33 vehicles were deflected normally and the others either spun out, rolled over, or stopped astride the rail.

Data indicating how often guardrails may be expected to be struck within a given impact angle range are reported by Bitzl (*12*), and may be inferred from the median encroachment studies of Hutchinson and Kennedy (*13*). According to Bitzl, approximately 28 percent of the guardrail accidents investigated on the Frankfort-Mannheim section of the Autobahn occurred with impact angles greater than 20 degrees. The median encroachment data reported by Hutchinson and Kennedy for rural FAI routes 74 and 57, although not solely for guardrail accidents, show that vehicles left the roadway at angles greater than 20 degrees about 15 to 20 percent of the time.

Some information from a survey of all reported guardrail accidents in 1964 on the New York State Thruway, a four-lane divided highway forming a part of the Interstate System, is given in Table 2. From the descriptions of the vehicle reactions after impacting the guardrails or median barriers, it can be concluded that in a large number of these accidents the performance of the barrier was not completely satisfactory.

Operational experience with cable-chain link fence and double blocked-out beam median barriers reported by the State of California (*14, 15*) shows that although both types have been effective in reducing the frequency of cross-median accidents, the rate of accidents involving the median has increased at locations where barriers have been installed. An increase in accident frequency after median barrier installation was also revealed in before-and-after studies in Pennsylvania (*16*). The California studies revealed that, for the most part, both types of barriers were performing effectively, but that the cable-chain link fence median barriers were sometimes penetrated or vaulted in areas where it was installed on sawtooth-type medians. Another observed undesirable characteristic of the cable-chain link median barrier is that the impacting vehicles frequently undergo rather violent spinouts that can cause the occupants to be ejected and to thereby be exposed to greater danger.

Although the foregoing discussion permits some insight as to the impact conditions and barrier performance derived from actual field experience, it is evident that the available data are quite meager and fragmentary. It would appear that an accident experience study in which an attempt was made to get detailed and complete information as to how many times the guardrail was impacted, what the impact conditions were, how the barriers performed,

vehicle and barrier damage, etc., would be of great benefit. If such studies were made for the most commonly used guardrails and median barriers presently employed, a much more comprehensive and accurate knowledge of the degree to which guardrails are performing their intended function, and in which manner and under what conditions they fail, would be gained.

TYPES OF GUARDRAILS IN CURRENT USE

Although numerous types and designs of guardrails are in use today, they are commonly divided into three broad classifications according to the stiffness of the barrier longitudinal elements or the relative amount of lateral deflection that results when impacted by a vehicle. These classifications are as follows:

1. Rigid barriers, in which little or no deflection is allowed.
2. Semi-rigid barriers with small to moderate deflections.
3. Flexible barriers that permit relatively large deflections.

Some of the physical characteristics and important dimensions of the more commonly used barriers as they are appropriate to each of these rather loosely defined classifications are presented in the following.

Rigid Barriers

Rigid barriers are generally used only where the space available for deflection is limited, as on very narrow medians and bridge structures. Because they must essentially be made unyielding, these barriers are often constructed of reinforced concrete.

Excluding bridge railing designs,* very little information was found pertaining to rigid barriers and few in the United States have been subjected to full-scale dynamic tests. Perhaps the best-known rigid barrier design in the United States is the so-called New Jersey concrete median barrier shown in Figure 4a. This barrier is approximately 24 in. wide at the base, 32 to 34 in. high, and has sloped sides that taper to a 6-in. thickness at the top.

Another rigid median barrier, called "Isle-Guard" (Fig. 4b), has been in use for a number of years in at least one installation in New York City. The effectiveness of this patented design has been demonstrated by the inventor on several occasions by deliberate impacts, and also by the reduction of accidents since the barrier was installed. The barrier is 22½ in. wide at the base, 26 in. high, 4 in. thick at the neck, 6½ in. thick at the head, and has sloping sides at an angle of about 66 degrees with the horizontal. One significant difference between this barrier and the New Jersey median barrier is the thin steel sheath on the exterior surface, which, by virtue of the smaller friction coefficient, is believed to facilitate a smooth redirecting action of the vehicle as the wheels momentarily ride up the sloped side. The shapes of both barriers are designed to minimize contact and damage to vehicles in shallow-angle impacts.

* Bridge rails, as distinguished from roadside and median guardrails, are not treated in this report.

In Europe, several types of rigid guardrails and median barriers known as "DAV" (Dansk Auto-Vaern) Safety Guard Rails are commonly used; one of these is shown in Figure 4c. The rails are reinforced concrete beams about 6.5 ft long connected together and supported on special 8x9-in. concrete posts placed in the ground to a depth of 30 to 39 in. Rail height above the road surface is about 25 in. Specifications for these guardrails include (*17*):

1. Concrete ultimate stress	4,250 psi
2. Maximum load applied to middle of beam when supported on post at either end	3.5 tons
3. Ultimate tensile strength of the connecting members	8.0 tons

On the basis of presently available information, the advantages of rigid barriers, particularly of the solid wall type, would seem to be: (1) they can be designed to withstand the most severe impact without penetration or pocketing; (2) there are no posts upon which a vehicle can become snagged; (3) they can be designed so as to cause little or no vehicle damage for impacts of low severity; (4) reflection angles of impacting vehicles are low (*18*); and (5) they are not easily damaged, hence are easy to maintain. Among the disadvantages are: (1) being unyielding, they absorb little kinetic energy of the vehicle and tend to aggravate the acceleration environment of the vehicle occupants; (2) they perhaps are not as aesthetically attractive as some of the other types of barriers; (3) in some climates, they may intensify the snow removal problem; and (4) although no substantiating information has been found, they would appear to have a higher installation cost.

Semi-Rigid Barriers

CORRUGATED BEAM

By far the most prevalent type of semi-rigid barrier presently used is the longitudinally corrugated metal rail mounted on posts. Typical roadside guardrail and median barrier configurations are shown in Figure 5a. The rails are frequently attached directly to the posts, but the barrier performance is improved when they are blocked-out away from the posts because the possibility of snagging the vehicle is reduced. In the United States, the mounting height of the top of the rail generally varies between 24 and 27 in. above the ground and the standard post spacing is 12.5 ft. For median barrier installations, a mounting height of 30 in. and a reduced post spacing to 6 ft 3 in., with the addition of an auxiliary lower rubbing rail to prevent snagging, has been found to be an effective design (*19, 20*).

Although some of the lateral force to restrain and redirect impacting vehicles is produced by beam bending, the major portion is obtained through the tension forces developed because of local flattening of the rail at or near the point of impact. These forces stretch the rail as it is deflected laterally and are distributed among several posts in reaction with the ground. The profile and physical properties of a rail that is more or less standard in the United States are compared in Table 3 with some of those used by other countries. Besides the minimum tensile

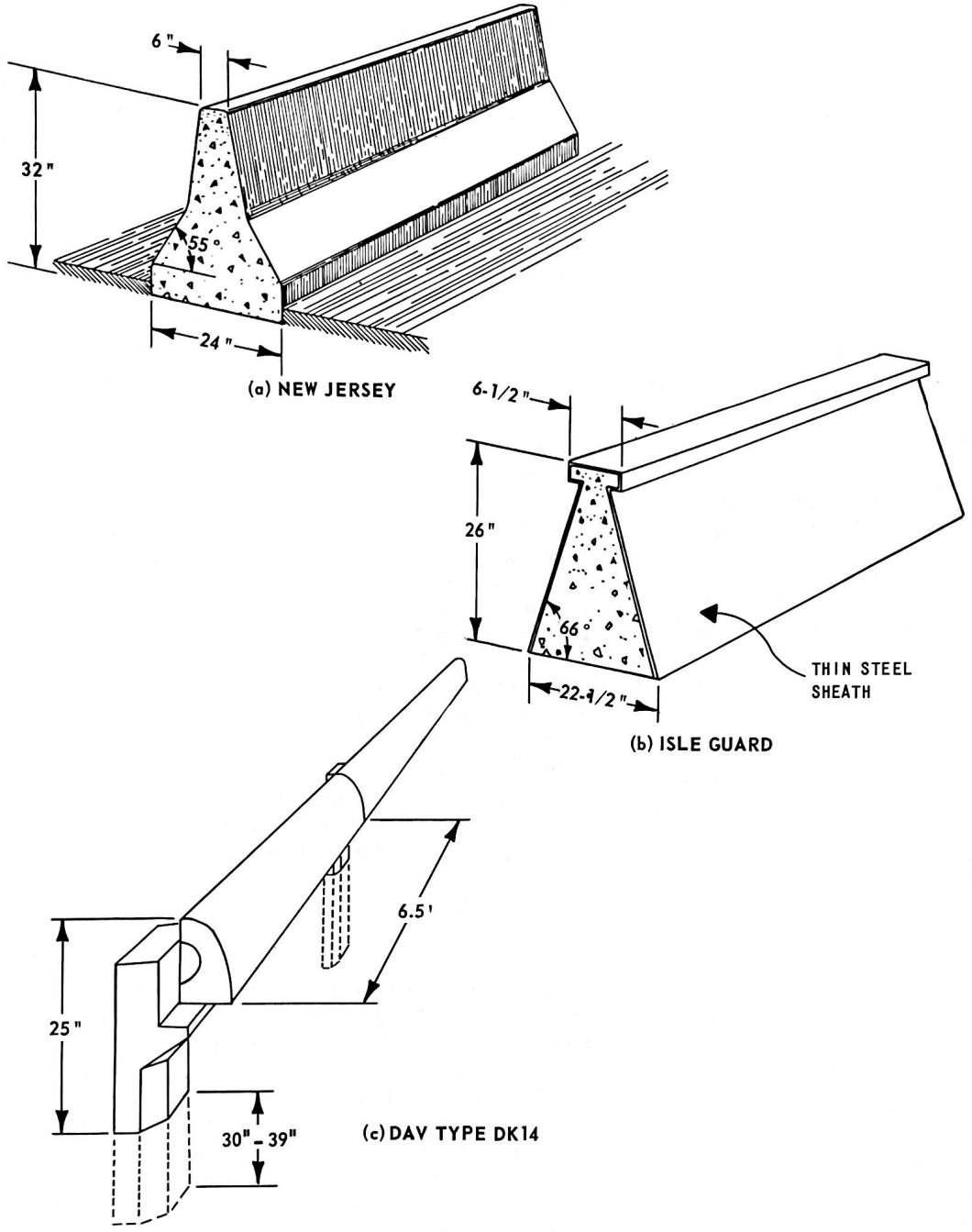

Figure 4. Rigid barriers.

strength given in the table for the W-section beam, the specifications for rail strength are based on allowable deflections when loaded as a simply supported beam with a concentrated load at mid-span. Typical requirements for steel and aluminum W-section guardrail of various thicknesses are presented in Table 4.

Many different types of posts are used for beam guardrail construction, the most common being 6x4-in. 8.5# and 6x6-in. 15.5# steel, and wooden and concrete posts usually 6x8-in., 8x8-in., or 8-in. in diameter. Post depth in the soil normally is between 40 in. and 48 in. Generally similar sizes are employed in Europe, where sometimes channel and railroad rail sections also are used for posts (*21*). That so many different types and sizes of posts and post materials are used, with guardrail detail plans often indicating that any one of several post types is acceptable, indicates that the required post properties are essentially quantitatively undefined because the dynamic load-deflection characteristics of these various posts placed in the ground must certainly vary over a wide range. Few load-deflection data

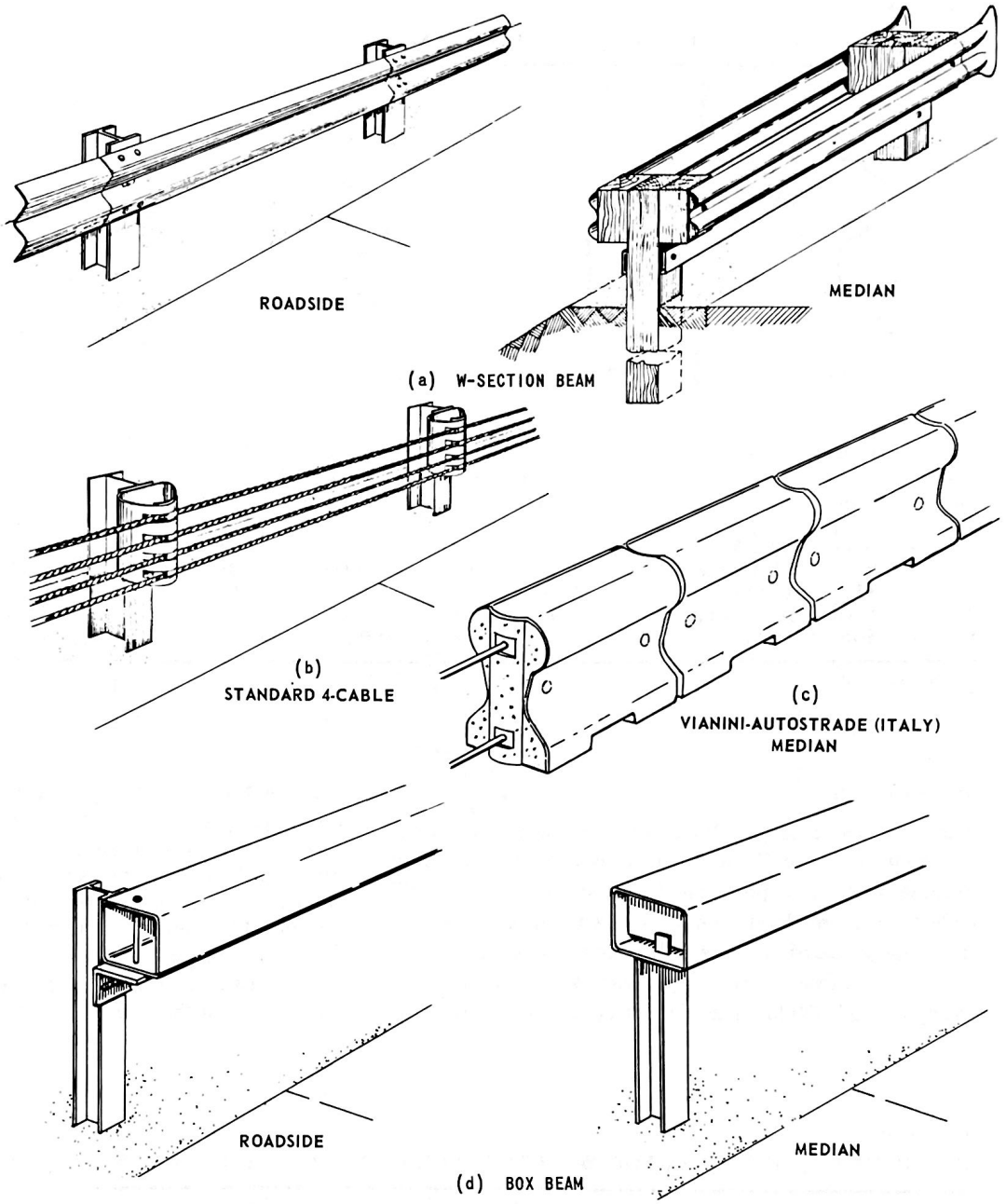

Figure 5. Semi-rigid barriers.

on posts in soil under dynamic conditions are currently available to the design engineer to enable him to design barrier structures with components of compatible strength that will yield or deflect in a predictable manner under impact loads.

The suitability of a particular post has largely been judged on the basis of results of strength tests under static loads performed either in the laboratory (*1, 22*) or with posts in soil (*1, 23*) and full-scale tests in which the posts are an integral part of a complete barrier system. General Motors (*1*) and the State of California (*19*) have concluded that 6x8-in. and 8x8-in. wooden posts exhibit the most desirable properties. More recently, New York State obtained some data on the behavior of 6x4x4-in. 8.5# steel and 6x8-in. wood posts under impact conditions during a post-in-soil test program. These force data (Fig. 6) were obtained by measuring the load on the bumper of a truck as it was driven into a line of posts, making contact with each post at a height of 19 in. above the ground. The differences between the load-deflection characteristics of the two types of posts and effects of different types of soil as obtained in these tests may be readily seen.

TABLE 3
PHYSICAL CHARACTERISTICS OF CORRUGATED STEEL BEAMS FOR GUARDRAILS

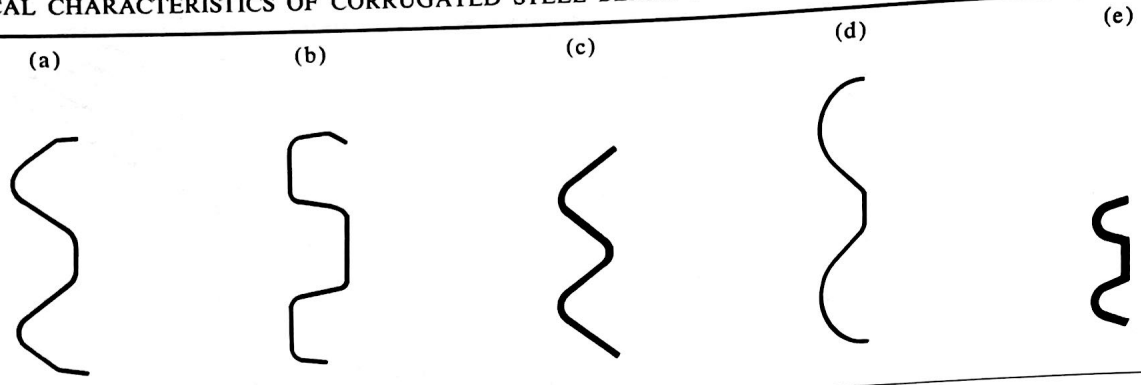

TYPE									
DESIGNATION	PROFILE	HEIGHT (IN.)	WIDTH (IN.)	THICKNESS (IN.)	WEIGHT (LB/FT)	CROSS-SECT. AREA (SQ IN.)	MOM. OF INERTIA (IN.^{4})	SECTION MODULUS (IN.^{3})	TENSILE STRENGTH (TONS)
a	W-section, USA	12	3	0.105	6.82	2.01	2.34	1.39	40 [a]
b	Profilafroid, France	11.8	3.15	0.118	8.05	2.39	3.13	1.89	62.5
c	Alpine, Austria	10.6	3	0.157	9.0	2.48	2.02	1.22	123
d	NKK Type 5, Japan	13.8	2.33	0.126	—	2.23	1.44	1.11	—
e	Swedish profile	6.3	1.65	0.236	7.86	2.31	2.12	0.67	60

[a] Minimum.

STANDARD CABLE

The standard cable guardrail, one configuration of which is shown in Figure 5b, is classified as a semi-rigid barrier because the heavy posts employed supposedly limit the deflections to moderate amounts when impacted. Again, many variations of this type of barrier are used. The cables are ¾-in. diameter wire rope with a minimum tensile strength of 25,000 lb. The number of cables usually varies between 2 and 4 and they most frequently are mounted on offset spring brackets that hold the cables at a separation of 4 to 6 in. In some installations, however, the cables are attached directly to the posts. The posts are generally of the types previously described, but post spacing varies considerably (between 10 and 16 ft) among the States using this type of barrier.

Few test data on the performance of this type of barrier were found in the literature. Of the two tests reported by

TABLE 4
STRENGTH REQUIREMENTS FOR W-SECTION STEEL AND ALUMINUM RAILS

			BEAM STRENGTH [a]			
			TRAFFIC FACE UP		TRAFFIC FACE DOWN	
METAL	NOMINAL THICKNESS (IN.)	MIN. TENS. STRENGTH OF JOINT (LB)	LOAD (LB)	MAX. DEFL. (IN.)	LOAD (LB)	MAX. DEFL. (IN.)
Steel	0.105	80,000	1,500	2¾	1,200	2¾
			2,000	5½	1,600	5½
	0.135	100,000	2,000	2¾	1,600	2¾
			3,000	5½	1,400	5½
Aluminum	0.105	65,000	1,200	3½	1,000	3½
			1,800	5½	1,400	5½
	0.125	80,000	1,500	3½	1,200	3½
			2,000	5½	1,600	5½
	0.156	100,000	2,000	4	1,600	4
			3,000	6	2,400	6

[a] With rail element freely supported on a 12-ft 0-in. clear span and the load applied through a 3-in. flat surface at the center of the span.

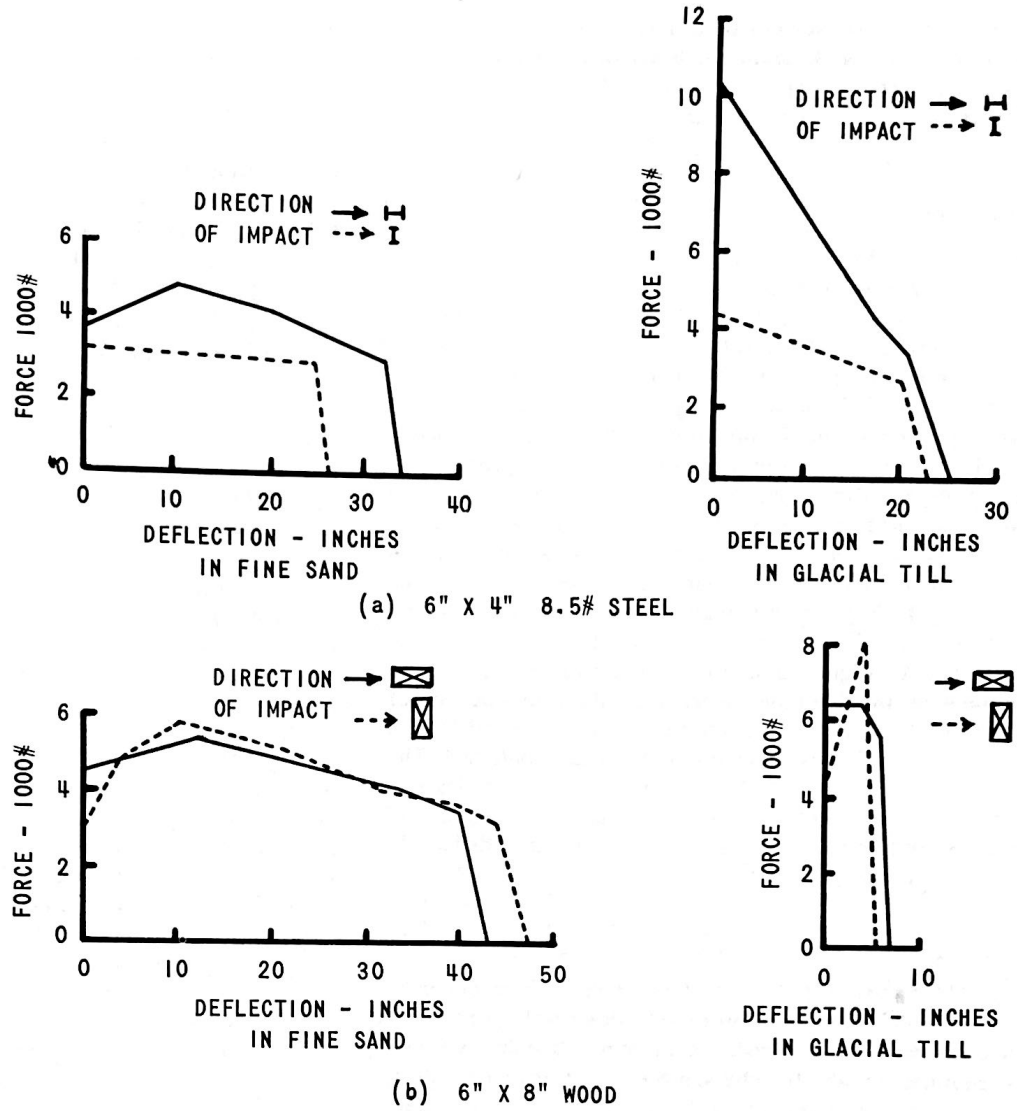

Figure 6. Dynamic force-deflection characteristics of posts in soil.

General Motors (*1*), only one could be considered a successful barrier performance. The results of the test by Cornell Aeronautical Laboratory (*9*) were catastrophic—the vehicle became pocketed in the barrier and stopped abruptly. Aside from its unknown performance by test, the advantages of this type of barrier appear to be primarily economic. Certainly the combination of flexible rail elements and heavy rigid posts would seem to be incompatible and conducive to vehicles penetrating sufficiently to become pocketed or snagged, except for very shallow angle impacts.

BOX BEAM

Relatively recently New York State developed and adopted as standard a semi-rigid box-beam barrier of the type shown in Figure 5d. This barrier consists of a 6x6x3/16-in., hollow, steel-tube horizontal railing (8x6x1/4-in. in the case of median barriers) weakly attached or supported on 3-in. I 5.7# steel posts spaced 6 ft apart. A spade plate, whose optimum dimensions were determined in the post test program previously mentioned, is welded to the bottom of each post in order to obtain proper soil reactions over a range of variable soil conditions. The posts are sunk into the ground to a minimum depth of 36 in. and the top of the box-beam rail is nominally 27 in. above the ground.

The operating principle of this barrier design is quite different from those previously described in that the forces of impact are resisted by the beam strength of the rail and are distributed over a large number of relatively weak posts. Unlike the other barriers, which have large variations in load-deflection characteristics, depending upon whether the load is applied between posts or at a post location, hence produce a "lumpy" type of reaction to the impacting vehicle as it slides along the rail, the more uniform deflection characteristics provided by the box-beam barrier minimize the

possibility of the vehicle becoming pocketed between or snagging on posts. In addition, design of the posts to always yield above the ground line, results in barrier performance that is much less likely to be affected by variations in soil conditions.

INERTIA BARRIER

A type of semi-rigid barrier embodying still another operating principle is the Vianini-Autostrade Safety Barrier, developed in Italy (*24, 25*) and shown in Figure 5c. Operation of this barrier depends largely on the inertia of massive concrete elements simply placed on the ground end-to-end and prevented from separating by two prestressed steel wires passing longitudinally through them. The elements, similar in cross section to a railroad rail, are approximately 24 in. high, 18 in. wide, 39 in. long, and weigh about 880 lb. each. The end faces of each element are shaped to allow rotation between adjacent elements as the barrier is deflected laterally. In this barrier, the deflection and the number of elements principally affected by an impacting vehicle depend on the friction developed between the barrier and the ground, and the amount of prestress set up in the wires that hold the elements together. By selection of the proper prestress, the barrier stiffness best suited for the particular conditions at hand may be readily obtained. The absence of posts on which to snag impacting vehicles and the ease of maintenance (it is not easily damaged and needs only to be pushed back into alignment if deflected) are also advantages of this barrier design.

Flexible Barriers

Flexible barriers, by allowing large deflections in comparison to the other types previously described, are advantageous because they redirect or stop offending vehicles more gradually and thereby subject the occupants to lower, more tolerable acceleration levels for the same impact conditions. One such barrier design, investigated quite thoroughly by the California Division of Highways (*14, 19, 26, 27*), is the cable-chain link fence median barrier shown in Figure 7. The barrier consists of two ¾-in. diameter wire rope cables fastened by U-bolts to 2¼-in. 4.1# H-section fence posts, at a height between 27 in. and 30 in. above the ground. In addition, a 48-in. chain-link fence is attached to the posts by steel wire ties. The posts, spaced on 8 ft centers, are embedded in 10-in. diameter concrete post footings extending about 30 in. into the ground. When a vehicle impacts this barrier, the wire cables are stripped off the posts, which bend over as the barrier deflects, and the wire mesh is gathered up in a bundle ahead of the vehicle as it comes to a stop. This type of barrier has been recommended for use on California medians having a minimum width of 22 ft to provide safe allowance for cable deflection during impact and to permit maintenance to be performed completely off the traffic lanes (*27*).

Similar cable barriers without the chain-link fence have been designed by the British Road Research Laboratory (*28*) and New York State. In the British design, two ¾-in. diameter cables, each with a breaking strength of 17 tons, are arranged one above the other in slots cut into the web at the tops of 2½x1x¼-in. steel H-section posts so that the center of the lower cable is 27 in. above the level of the median. The posts, on 8-ft centers, stand in rectangular sockets 18 in. deep formed in either 6-in. or 12-in. diameter concrete post footings buried to a depth of 24 in. The barrier is designed primarily for use on high-speed roads having a median width of at least 15 ft.

The New York design consists of three ¾-in. cables spaced 3 in. apart, with the top cable at a height of 27 in. above the ground, and attached by small hook or J bolts to the same type of post used for the box-beam barrier. Post spacing for this barrier is normally 16 ft. Another type of flexible barrier design, recently adopted by New York State, employs a standard W-section steel beam instead of the three cables. This latter design is believed to result in less vehicle and barrier damage for the less severe, low-speed, brushing-type impacts. Depending on the space available for deflection, post spacing may vary between 6 and 26 ft.

The flexible barriers resist and redirect impacting vehicles by tension forces developed in the cables as they are deflected laterally. Therefore, these barriers must be terminated securely by end anchorages in the ground. In long installations, additional intermediate anchorages may be necessary. The barriers are designed to permit large deflections under impact so that vehicles are not turned abruptly with high accelerations, as is the case with the more rigid barriers. For this reason, relatively weak posts, from which the cables are readily stripped and which are easily knocked over to prevent snagging, are employed. Because of the large deflections and the long distances that impacting vehicles remain in contact with this type of barrier, relatively more damage results, which increases the cost of maintenance. However, a California study (*15*) indicates that the lower installation cost of the cable-chain link median barriers, compared to that of the double blocked-out beam median design, greatly offsets the higher costs of maintaining them.

FULL-SCALE BARRIER TESTS

Although research has been performed with the objective of predicting barrier performance from model tests and application of analytical techniques, with some success (e.g., *7, 29*), the mechanics of the collision process are so complicated that it generally has been necessary to determine actual barrier performance on the basis of results obtained from full-scale dynamic tests. The performance is judged primarily on how well the barrier satisfies the following three criteria that define the general barrier requirements:

1. Is the barrier positive; that is, does it prevent the vehicle from entering the hazardous area?
2. Is the impacting vehicle redirected parallel to the barrier in a way that it does not become a hazard to other traffic?
3. Is the vehicle-barrier interaction such as to produce minimum injury to the occupants?

Other considerations, such as damage to the vehicle or to the barrier, although not to be discounted completely, are nevertheless of secondary importance.

The results of full-scale dynamic tests on many barrier designs are reported and described in the literature in varying detail. However, it is not always possible to rate barrier performance in a particular test as being either a success or a failure with respect to the previously stated criteria, principally because of the lack of a specific or absolute scale for measuring the degree of compliance with the last two requirements. Clearly, if the vehicle penetrates the barrier, is abruptly stopped as a result of having become pocketed or snagged, or rolls over after impact, the barrier does not function as intended and must be deemed unsuccessful. On the other hand, whether the vehicle response is such as to produce no hazard to other traffic or to the occupants is more often than not largely a subjective judgment of the investigator based on measured accelerations of the vehicle or dummy occupants and/or the observed motions and trajectory of the vehicle during the following impact.

Summaries of the full-scale dynamic tests reported in the literautre reviewed in this study are presented in Tables 5 and 6 for tests conducted in the United States on semi-rigid and flexible barriers, respectively, and in Table 7 for foreign tests. From these tables it may be seen that many barrier configurations have been tested under widely varying test conditions and with equally variable degrees of success. It is difficult to make valid direct comparisons of barrier performance and to correlate the results obtained for each class of barrier in an attempt to establish limiting conditions for which satisfactory performance is achieved. This is true primarily because of the many different variables in the test conditions that can have a significant influence on the observed performance of the barrier. These include, for example, vehicles having different physical properties (mass, moment of inertia, center of gravity location, bumper height, deformation properties, etc.), different combinations of speed and impact angles, differences in barrier installation (rail height, length of test installation, soil conditions, anchored and unanchored, etc.), and differences in the point of contact with the barrier (i.e., between posts, at a post location, at a given distance from the end of the barrier). It also seems logical that vehicle response may be greatly dependent on whether the vehicle is coasted into the barrier or impacts while under power, and also by whether or not the brakes are applied after impact.

It was originally hoped that barrier thresholds of failure might be indicated by relating successful and unsuccessful performances (as best as could be determined from the reported test results) to the lateral component of total momentum of the impacting vehicle in each case, similar to the approach taken by Jehu (*30*), who attempted to establish critical velocities and impact angles for various barrier types. This attempt to correlate the test results to determine successful barrier performance limits is shown in Figures 8, 9, and 10. As may be seen from these plots, a division of successful and unsuccessful barrier performances on the basis of constant lateral momentum is not satisfactorily indicated. To what extent this may be due to differences in barrier construction cannot be ascertained, but these plots do indicate that barriers on the whole are more likely to fail as the impact angle increases, even if the speed of the vehicle is reduced so that the lateral momentum is constant. It appears, therefore, that a high-speed, low-angle test condition and one of lower speed and higher angle are not of comparable impact severity insofar as the effect on barrier performance is concerned.

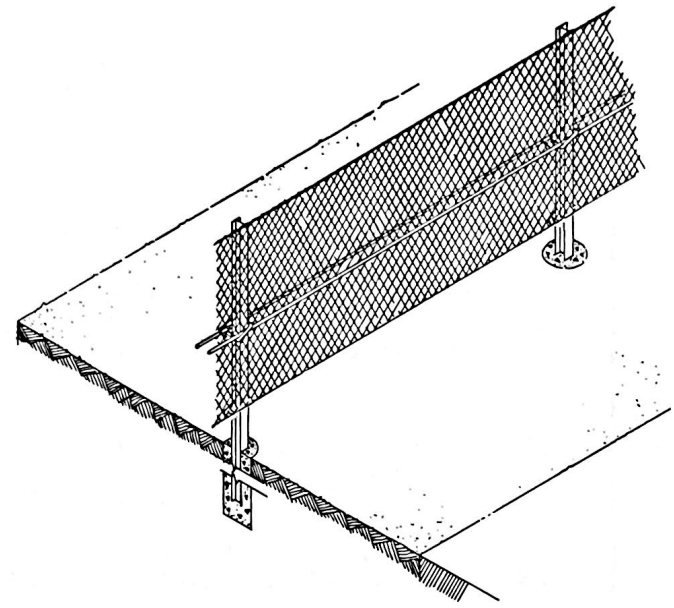

Figure 7. California cable-chain link fence flexible median barrier.

Another interesting point to be noted from the tabulated data and these plots, especially Figure 8, is an indication that for the same angle of impact better barrier performance might result, even at much higher values of lateral momentum, if heavy vehicles, such as trucks or buses, are used as the test vehicles rather than standard automobiles. This may result, at least in part, because the rigid posts used in the construction of corrugated beam-type guardrails become relatively weaker and of less rigidity to vehicles of large mass and hence are less likely to snag the vehicle or cause it to be bounced off the rail. Furthermore, differences in the values of the moments of inertia about the yaw axis will affect the yaw responses of the vehicles and hence will result in differences in redirection after impact. In any case, the foregoing observations point out the need for standardization of test conditions and procedures if barrier designs are to be evaluated and valid conclusions reached in a comparison of their relative performance capabilities.

Inasmuch as it is impractical in a report of this scope to discuss the detailed results of individual tests reported in the literature, the principal findings obtained for some of the different types of barriers tested by various investigators are briefly summarized in the following.

TABLE 5

SUMMARY OF U.S. SEMI-RIGID BARRIER TESTS

NO.	REF.	RAIL	POST	POST SPACING (FT-IN.)	POST DEPTH IN SOIL (IN.)	HEIGHT OF RAIL [a] (IN.)	VEH. WT. (LB)	VEH. SPEED (MPH)	IMPACT ANGLE (DEG)	TOTAL MOMENTUM (LB-SEC)	VEHICLE DECEL., LONG./LAT. (g)	BARRIER PERFORMANCE OR VEHICLE REACTION
1	1	Steel beam guardrail	6 × 4 in. 8.5# steel	12-6	43	24	4,163	37	20	7,010	7.5/6	Good
2	1	Steel beam guardrail	6 × 4 in. 8.5# steel	12-6	43	24	4,163	35	33	6,630	—	Pocketed (short instal.)
3	1	Steel beam guardrail	6 × 4 in. 8.5# steel	12-6	43	24	4,163	30	33	5,690	—	Good
4	1	Steel beam guardrail	6 × 4 in. 8.5# steel	12-6	43	24	4,033	35	20	6,410	—	Good
5	1	Steel beam guardrail	6 × 4 in. 8.5# steel	12-6	43	24	4,030	35	33	6,410	5.6/3.6	Penetrated (short, end anchors)
6	1	Steel beam guardrail	6 × 4 in. 8.5# steel	12-6	43	24	4,150	35	33	6,600	—	Penetrated (short, end anchors)
7	7	Steel beam guardrail	6 × 4 in. 8.5# steel	12-6	39	27	3,800	54	19	9,350	9.2/3	Pocketed and spinout
8	30	Steel beam guardrail	6 × 4 in. 8.5# steel	12-6	—	27	3,215	54	15	7,910	—	High exit angle
9	30	Steel beam guardrail	6 × 4 in. 8.5# steel	12-6	—	27	3,200	60	15	8,750	—	Large defl. and spin
10	1	Steel beam guardrail	6 × 8 in. wood	12-6	48	24	3,963	65	25	11,720	10.1/8	Penetrated (short instal.)
11	1	Steel beam guardrail	6 × 8 in. conc.	12-6	47	24	4,033	35	20	6,410	2/3.5	Good
12	1	Steel beam guardrail	6 × 8 in. conc.	12-6	47	24	4,058	39	20.4	7,200	5.1/6.8	Good; high exit angle
13	1	Steel beam guardrail	10 × 10 in. conc.	12-6	42	24	4,033	34	20	6,140	8.1/5.9	Good
14	1	Steel beam guardrail	6 × 8 in. wood	12-6	48	24	4,029	37	20	6,780	6.8/5.8	Good
15	1	Steel beam guardrail	6 × 8 in. wood	12-6	48	24	4,163	60	25	11,400	—	Good
16	19	Steel beam guardrail	8 × 8 in. wood	12-6	30	25	3,980	60	27	10,880	—	Pocketed and rollover
17	1	Steel beam guardrail [b]	6 × 8 in. wood	12-6	48	24	4,150	68	18.5	12,920	16.4/13.1	Good; high deflection
18	1	Steel beam guardrail [b]	6 × 8 in. conc.	12-6	48	24	4,085	65	20.5	12,020	9.3/6.4	Pocketed
19	20	Steel blocked-out g.r.	8 × 8 in. wood	12-6	41	24	4,570	58	25	12,100	—	Penetrated
20	30	0.125-in. alum. beam g.r.	6 × 4 in. 8.5# steel	12-6	—	27	3,465	56	15	8,840	—	Good
21	30	0.125-in. alum. beam g.r.	6 × 4 in. 8.5# steel	12-6	—	27	3,140	60	15	8,600	—	Good
22	30	0.125-in. alum. beam g.r.	6 × 4 in. 8.5# steel	12-6	—	27	3,225	60	15	8,820	—	Good
23	30	0.125-in. alum. beam g.r.	6 × 4 in. 8.5# steel	12-6	—	27	3,210	54	15	7,900	—	Good
24	20	0.156-in. alum. bl.-out g.r.	8 × 8 in. wood	6-3	35	24	4,570	60	25	12,500	—	Beam failed and snag
25	20	Steel blkd-out g.r.	8 × 8 in. wood	6-3	35	24	4,570	59	25	12,300	—	Good (exit angle 19°)
26	20	Steel blkd-out g.r.	8 × 8 in. wood	6-3	35	27	4,570	60	25	12,500	—	Good (exit angle 17°)
27	20	Steel blkd-out g.r.[c]	8 × 8 in. wood	6-3	41	30	4,570	60	25	12,500	—	Good (exit angle 13°)
28	31	Steel blkd-out g.r.	6 × 4 in. 8.5# steel	6-3	38	27	3,900	59	25	10,400	—	Beam failed; veh. rollover
29	1	Steel beam guardrail [b]	6 × 8 in. conc.	6-3	48	24	4,210	67	18	12,800	12.9/11.5	Good
30	1	Steel beam guardrail [b]	6 × 8 in. conc.	6-3	48	24	23,590	27	15	29,000	—	Good
31	1	Steel beam guardrail [b]	6 × 8 in. conc.	6-3	48	24	23,590	40	15	42,900	8.8/5	Good
32	19	Dbl steel beam median	8 × 8 in. wood	12-6	30	25	3,980	59	31	10,690	—	Vehicle rollover
33	19	Dbl steel beam median	8 × 8 in. wood	6-3	30	25	3,980	58	31	10,500	—	High exit; veh. rollover
34	19	Dbl steel beam median	6 × 6 in. 15.5# steel	6-3	30[d]	30	4,000	58	30	10,550	—	Snag
35	19	Dbl steel beam median	8 × 8 in. wood	6-3	42	30	4,050	59	26	10,870	—	Snag and veh. rollover
36	19	Dbl blkd-out steel median [e]	8 × 8 in. wood	6-3	41	30	4,000	60	32	10,900	—	Good; high exit angle
37	19	Dbl blkd-out steel median [e]	8 × 8 in. wood	6-3	41	30	17,500	41	36	32,600	—	Good; high exit angle
38	20	Dbl blkd-out steel median [e]	8 × 8 in. wood	6-3	41	30	4,570	69	25	14,400	—	Good (exit angle 15°)
39	20	Dbl blkd-out steel median [e]	8 × 8 in. wood	6-3	41	30	4,570	68	25	14,200	—	Good (exit angle 14°)
40	20	Dbl blkd-out 0.125-in. alum. med.[e]	8 × 8 in. wood	6-3	41	30	4,570	67	25	14,000	—	Penetrated and veh. rollover
41	20	Dbl blkd-out 0.156-in .alum. med.[e]	8 × 8 in. wood	6-3	41	30	4,570	67	25	14,000	—	Good (exit angle 14°)
42	7	Dbl blkd-out steel median	6 × 4 in. 8.5# steel	6-3	39	27	3,800	67	16	11,580	2.8/5.3	Good (exit angle 9°)
43	1	Std. 4 cable	6 × 4 in. 8.5# steel	12-2½	40	27	4,137	41	20	7,700	—/5.8	Good
44	1	Std. 4 cable	6 × 4 in. 8.5# steel	12-6	40	27	4,500	61.5	20	12,600	7/6	Cables failed
45	7	Std. 4 cable	6 × 4 in. 8.5# steel	10-0	39	26	3,800	41	34	7,100	3.7/4.3	Pocketed and spinout
46	7	5¼ × 10 in. stl box beam med.	2¼ × 2¼ in. 4.1# stl	4-0	39[f]	26	3,600	58	18	9,510	4/6.2	Good (exit angle 7°)
47	7	5¼ × 10 in. stl box beam med.	2¼ × 2¼ in. 4.1# stl	4-0	39[f]	26	3,600	52	24	8,520	6/6	Good (exit angle 7°)
48	7	2¼ × 10 in. stl box beam [g] med.	2¼ × 2¼ in. 4.1# stl	4-0	39[f]	26	3,600	60	25	9,840	—	Pocketed; anchor failed
49	7	2¼ × 10 in. stl box beam [g] med.	2¼ × 2¼ in. 4.1# stl	4-0	39[f]	26	3,600	55	20	9,020	4.3/2.8	Good (exit angle 9°)

[a] Top of rail. [b] With spring bracket. [c] Plus F rubbing rail. [d] Plus 6-in. curb. [e] Plus channel rubbing rail. [f] 8-in. diameter concrete. [g] Tension box beam.

TABLE 6

SUMMARY OF U.S. FLEXIBLE BARRIER TESTS

NO.	REF.	RAIL	POST	POST SPAC-ING (FT)	POST DEPTH IN SOIL (IN.)	HEIGHT OF RAIL (IN.)	VEH. WT. (LB)	VEH. SPEED (MPH)	IMPACT ANGLE (DEG)	TOTAL MOMENTUM (LB-SEC)	VEHICLE DECEL. LONG./LAT. (g)	BARRIER DEFL. (FT-IN.)	BARRIER PERFORMANCE OR VEHICLE REACTION
1	19	2 cables & fence	2¼ × 2¼ in. 4.1# stl	8	30[a]	1 @ 27[b]	4,000	56	27	10,200	69/154	7-2	Spinout
2	19	3 cables & fence	2¼ × 2¼ in. 4.1# stl	8	30[a]	2 @ 30[b]	4,000	61	31	11,100	—	8-6	Good
3	19	3 cables & fence	2¼ × 2¼ in. 4.1# stl	8	30[a]	2 @ 30[b]	3,700	41	15	6,900	55/22	3-4	Good
4	19	3 cables & fence	2¼ × 2¼ in. 4.1# stl	8	30[a]	2 @ 30[b]	3,700	52	32	8,750	53/34	9-0	Snag on intermed. anchor
5	19	3 cables & fence	2¼ × 2¼ in. 4.1# stl	8	30[a]	2 @ 30[b]	3,850	60	31	10,500	—	8-0	Good
6	19	3 cables & fence	2¼ × 2¼ in. 4.1# stl	8	30[a]	2 @ 30[b]	17,500	42	34	33,450	—	12-0	Good
7	14	3 cables & fence	2¼ × 2¼ in. 4.1# stl	8	30[a]	2 @ 30[b]	4,300	78	7	15,250	6.5/—	5-6	Violent spinout
8	14	2 cables & fence	2¼ × 2¼ in. 4.1# stl	8	30[a]	2 @ 30	4,300	84	7	16,430	2.4/—	5-6	Violent spinout
9	14	2 cables & fence	2¼ × 2¼ in. 4.1# stl	8	30[a]	2 @ 30	4,300	86	7	16,830	4/—	6-0	Violent spinout
10	14	2 cables & fence	2¼ × 2¼ in. 4.1# stl	8	30[a]	2 @ 30	4,300	76	10	14,850	3.6/—	6-0	Violent spinout
11	14	2 cables & fence	2¼ × 2¼ in. 4.1# stl	8	30[a]	2 @ 30	4,300	84	7	16,430	4.8/—	7-0	Violent spinout; anchor failed
12	14	2 cables & fence	2¼ × 2¼ in. 4.1# stl	8	30[a]	2 @ 30	4,300	75	7	14,700	3/—	6-0	Spinout
13	14	3 cables & fence	2¼ × 2¼ in. 4.1# stl	8	30[a]	1 @ 20, 32, 44	4,300	77	7	15,080	6.8/—	5-6	Rollover
14	14	2 cables & fence	2¼ × 2¼ in. 4.1# stl	8	30	2 @ 30[c]	4,300	74	22	14,450	—	—	Vaulted barrier
15	14	1 cable & fence[d]	2¼ × 2¼ in. 4.1# stl	8	30[a]	1 @ 30[c]	4,300	82	20	16,000	—	12-0	Pitch down and spinout
16	26	2 cables & fence	2¼ × 2¼ in. 4.1# stl	8	30[e]	2 @ 30	4,300	90	25	17,600	—	17-0	Good; slight spinout
17	26	2 cables	2¼ × 2¼ in. 4.1# stl	8	30[e]	2 @ 30	4,300	83	25	16,250	—	—	Penetrated; anchor failed
18	26	2 cables	2¼ × 2¼ in. 4.1# stl	8	30[e]	2 @ 30	4,300	84	25	16,450	—	17-0	Good; spinout
19	26	2 cables	2¼ × 2¼ in. 4.1# stl	8	30[e]	2 @ 27	4,300	87	25	17,000	—	17-0	Good; spinout
20	27	2 cables & fence	2¼ × 2¼ in. 4.1# stl	8	30[e]	2 @ 26[f]	4,138	67	7	12,640	—	3-8	Good; spinout, nearly vaulted
21	27	2 cables & fence	2¼ × 2¼ in. 4.1# stl	8	30[e]	2 @ 26[f]	2,540	67	25	7,750	—	7-6	Good (small car)
22	27	3 cables & fence	2¼ × 2¼ in. 4.1# stl	8	30[e]	2 @ 26[g]	4,138	65	7	12,250	—	4-6	Snag; violent pitch and rollover
23	27	3 cables & fence	2¼ × 2¼ in. 4.1# stl	8	30[e]	2 @ 27[g]	4,138	60	7	11,300	—	3-6	Violent spinout
24	27	3 cables & fence	2¼ × 2¼ in. 4.1# stl	8	30[e]	2 @ 27[g,h]	2,540	65	25	7,520	—	—	Pen.; cable spice failed (sm. car)
25	27	3 cables & fence	2¼ × 2¼ in. 4.1# stl	8	30[e]	2 @ 27[g,h]	2,540	63	25	7,300	—	—	Penetrated (small car)
26	1	3 cables & fence	2¼ × 2¼ in. 4.1# stl	8	30[a]	2 @ 30[b]	4,190	65	16.7	12,400	4.5/5	8-0	Good
27	1	3 cables & fence	2¼ × 2¼ in. 4.1# stl	8	30[a]	2 @ 30[b]	4,922	65	8	14,580	34/4.5	3-8	Snag; violent spin
28	1	3 cables & fence	2¼ × 2¼ in. 4.1# stl	8	30[a]	2 @ 34[i]	3,870	35	8.5	6,160	3.8/2.6	3-2	Good
29	32	2 cables & fence	—	—	—	—	—	60	10	8,200	—	—	Rollover
30	31	3 cables	2¼ × 2¼ in. 4.1# stl	8	30[j]	1 @ 18, 24, 30	3,900	58	29	10,300	—	11-0	Good (exit angle 8°)
31	33	3 cables	Light pipe A frame[k]	35	36[e]	1 @ 15, 22, 29	4,060	38	15	7,030	—	—	Good
32	33	3 cables	Light pipe A frame[k]	35	36[e]	1 @ 15, 22, 29	4,060	40	12-15	7,400	—	—	Good
33	33	3 cables	Light pipe A frame[k]	35	36[e]	1 @ 15, 22, 29	3,500	56	20	8,920	—	—	Climbed cables; 2 wh. crossed bar.
34	33	3 cables	Light pipe A frame[k]	35	36[e]	1 @ 15, 22, 29	3,500	43	25	6,850	—	—	Rollover

[a] 8-in. diameter concrete footing. [b] Plus 1 @ 9 in. [c] 8 percent ramp. [d] Envelop barrier. [e] 10-in. diameter concrete footing. [f] On 6-in. raised median. [g] Plus 1 @ 18 in. [h] Above 15-in. sloped median. [i] Plus 1 @ 12 in. [j] Drive anchor. [k] And anchor cables.

TABLE 7

SUMMARY OF FOREIGN BARRIER TESTS

NO.	REF.	RAIL	POST	POST SPACING (FT-IN.)	POST DEPTH IN SOIL (IN.)	HEIGHT OF RAIL [a] (IN.)	VEH. WT. (LB)	VEH. SPEED (MPH)	IMPACT ANGLE (DEG)	TOTAL MOMENTUM (LB-SEC)	VEHICLE DECEL. LONG./LAT. (g)	BARRIER PERFORMANCE OR VEHICLE REACTION
1	33	DAV conc. g.r.	Concrete	—	—	20	3,750	34	20	5,800	—	Good
2	33	DAV Dywidag g.r.	Concrete	—	—	22	3,000	46	20	6,290	—	Veh. rolled over
3	34	DAV Dywidag med.	Concrete	13-1	—	25.6	2,800	61	15	7,780	—	Good
4	34	DAV Dywidag med.	Concrete	13-1	—	25.6	2,800	61	30	7,720	—	Veh. thrown violently; rollover
5	34	DAV Dywidag med.	Concrete	13-1	—	25.6	25,000	46	15	51,800	—	Pen. and/or veh. rollover
6	34	DAV conc. g.r.	Concrete	13-1	—	25.6	25,000	47	15	53,500	—	Pen. and/or veh. rollover
7	34	DAV conc. g.r.	Concrete	13-1	—	—	25,000	46	15	52,400	—	Pen. and/or veh. rollover
8	35	DAV conc. g.r.	9.5 × 10 in. conc.	6-6	35.5	21	20,900	24	26.5	22,500	—	Penetrated
9	35	DAV conc. g.r.	10 × 10 in. conc.	13-1	39	19.7	19,800	31	25	27,500	—	Penetrated
10	36	Corr. stl beam g.r.	3-in. steel pipe	12-6	39.5	26	13,250	30	8	18,000	—	Good (exit angle 5-10°)
11	36	Corr. stl beam g.r.	3-in. steel pipe	12-6	39.5	26	13,700	35	15	21,700	—	Good (exit angle 5-10°)
12	36	Corr. stl beam g.r.	3-in. steel pipe	12-6	39.5	26	15,500	44	15	30,900	—	Veh. rollover on rail
13	36	Corr. stl beam g.r.	4-in. steel pipe	12-6	59	37.5	15,900	38	15	27,500	—	Good
14	36	Corr. stl beam g.r.	4-in. steel pipe	12-6	59	31.5	15,800	35	15	25,200	—	Good
15	36	Corr. stl beam g.r.	4-in. steel pipe	12-6	59	37.5	15,850	45	15	32,500	—	Veh. rollover on rail
16	36	Corr. stl beam g.r.	4-in. steel pipe	12-6	59	31.5	15,850	41	15	29,200	—	Good
17	36	Corr. stl beam g.r.	44# steel V	12-6	59	37.5	16,150	42	15	30,900	—	Good
18	36	Corr. stl beam g.r.	44# steel V	12-6	59	37.5	22,100	35	15	35,200	—	Good
19	36	Corr. stl beam g.r.	44# steel V	12-6	59	37.5	31,000	47	15	65,600	—	Veh. rollover on rail
20	35	Swed. profile stl beam g.r.	8 × 10 in. conc.	9-10	44	23	20,900	28	22.5	26,700	—	Large deflection; good
21	35	Swed. profile stl beam g.r.	8 × 10 in. conc.	9-10	47	19	19,600	28	27.5	25,000	—	Penetrated; rail failed
22	35	Swed. profile stl beam g.r.	8 × 10 in. conc.	9-10	47	19	19,800	29	28	25,800	—	Penetrated
23	35	Swed. profile stl beam g.r.	27.6# railroad rail	9-10	44	23	20,000	28	24	25,500	—	Rail knocked over; veh. redirected
24	35	Swed. profile stl beam g.r.	8 × 10 in. conc.	9-10	41.5	25.5	20,000	28	26	25,500	—	Rail knocked over; veh. redirected
25	35	UNP 14 stl channel g.r.	8 × 10 in. conc.	9-10	44	23	20,000	20	27.5	18,100	—	Good
26	37	Corr. stl beam g.r.	Special [c]	—	—	28	2,700	67	21	8,200	3	Good
27	34	Dbl stl beam median	—	13-1	—	25.6	2,800	38	5	4,850	—	Good
28	34	Dbl stl beam median	—	13-1	—	25.6	2,800	60	15	7,650	—	Good (exit angle 10-12°)
29	34	Dbl stl beam median	—	13-1	—	25.6	2,800	60	30	7,650	—	Snagged
30	34	Dbl stl beam median	—	13-1	—	25.6	25,000	42	15	48,000	—	Knocked down; veh. straddled rail
31	34	Dbl stl beam median	—	6-6	—	25.6	2,800	61	30	7,800	—	Snag; vehicle rollover
32	34	Dbl alum beam median	—	6-6	—	25.6	2,800	53	30	6,760	—	Rail failed
33	34	Dbl blkd-out stl med.	—	6-6	—	25.6	2,800	65	30	8,240	—	Vehicle rollover
34	34	Dbl blkd-out stl med.	—	13-1	—	25.6	2,800	48	30	6,120	—	Snag and penetrated
35	34	Dbl blkd-out stl med.[d]	—	13-1	—	29.5	25,000	48	15	54,600	—	Veh. rollover on rail
36	34	Dbl blkd-out stl med.[d]	NP 12 I	13-1	—	29.5	25,000	44	15	50,100	—	Good
37	34	Dbl blkd-out stl med.[d]	NP 12 I	13-1	—	29.5	2,800	69	20	8,800	—	Good
38	34	Dbl blkd-out stl med.[d]	NP 12 I	13-1	—	29.5	2,800	64	20	8,100	—	Good
39	34	Dbl blkd-out stl med.[d]	NP 12 I	13-1	—	29.5	2,800	55	20	7,000	—	Good
40	34	Dbl blkd-out stl med.[d]	NP 12 I	13-1	—	29.5	25,000	41	20	46,100	—	Good
41	30	Dbl blkd-out stl med.[d]	—	10-6	—	27	3,000	50	20	6,830	—	Good
42	24, 25	Conc. inertia med. barrier	None	—	—	23.5	1,985	47	20	4,220	—/7.8	Good
43	24, 25	Conc. inertia med. barrier	None	—	—	23.5	2,640	51	30	6,160	—/8.6	Good (exit angle 12°)
44	34	Slibar metal mesh fence	Lt wt tripod	26-2	—	—	2,800	67	15	8,500	—	Penetrated
45	34	Slibar metal mesh fence	Lt wt tripod	26-2	—	—	25,000	46	15	52,400	—	Penetrated
46	34	Stuttgart median [e]	Lt steel tube [f]	6-6	39	—	2,800	67	15	8,500	—	Good
47	34	Stuttgart median [e]	Lt steel tube [f]	6-6	39	—	25,000	47	15	53,500	—	Veh. rollover on barrier

[a] Top of rail. [b] Plus 2 × 4-in. angle. [c] With hydraulic cylinder. [d] With rail cross-supports. [e] Four cable pairs. [f] Weak at base.

Concrete Guardrails

Except for tests on various bridge rail designs and a single test of a straight-sided concrete wall, which did not truly function as a rigid barrier (*19*), the only reported rigid guardrail tests found have been those of the DAV type. In general, the performance of these barriers has not been

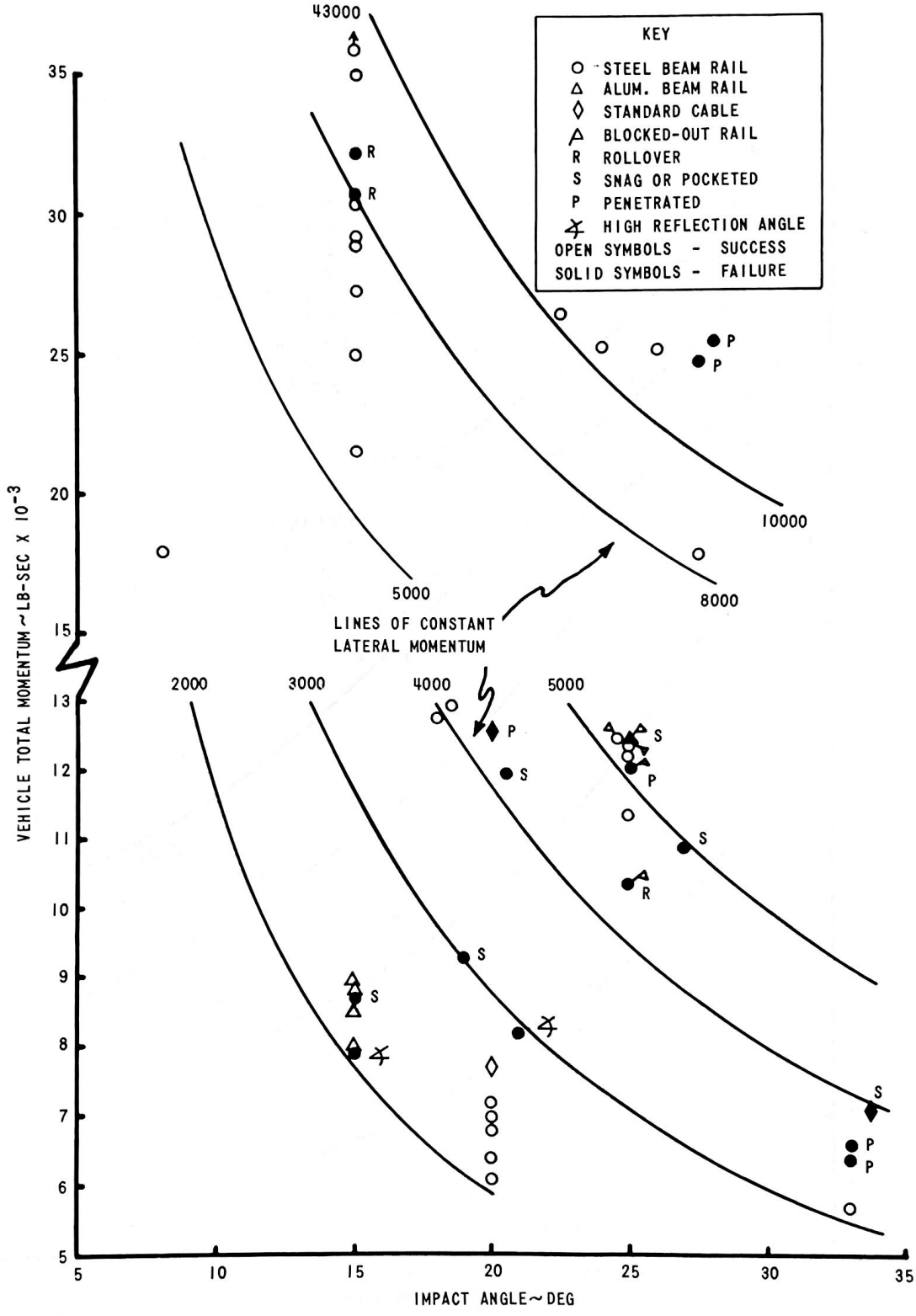

Figure 8. Semi-rigid guardrail performance in full-scale tests.

found to be satisfactory except for impacts of relatively low severity; i.e., low speeds and/or angles (*34, 35, 38*). In tests where the barrier failed, either the concrete rails have broken, allowing the vehicles to penetrate, or the vehicles have tended to overturn laterally toward the rail.

Corrugated Beam Guardrail and Median Barriers

The general conclusions reached by various investigators as to the behavior of corrugated beam guardrails are much in agreement and many design improvements have evolved as a consequence of the results obtained from full-scale

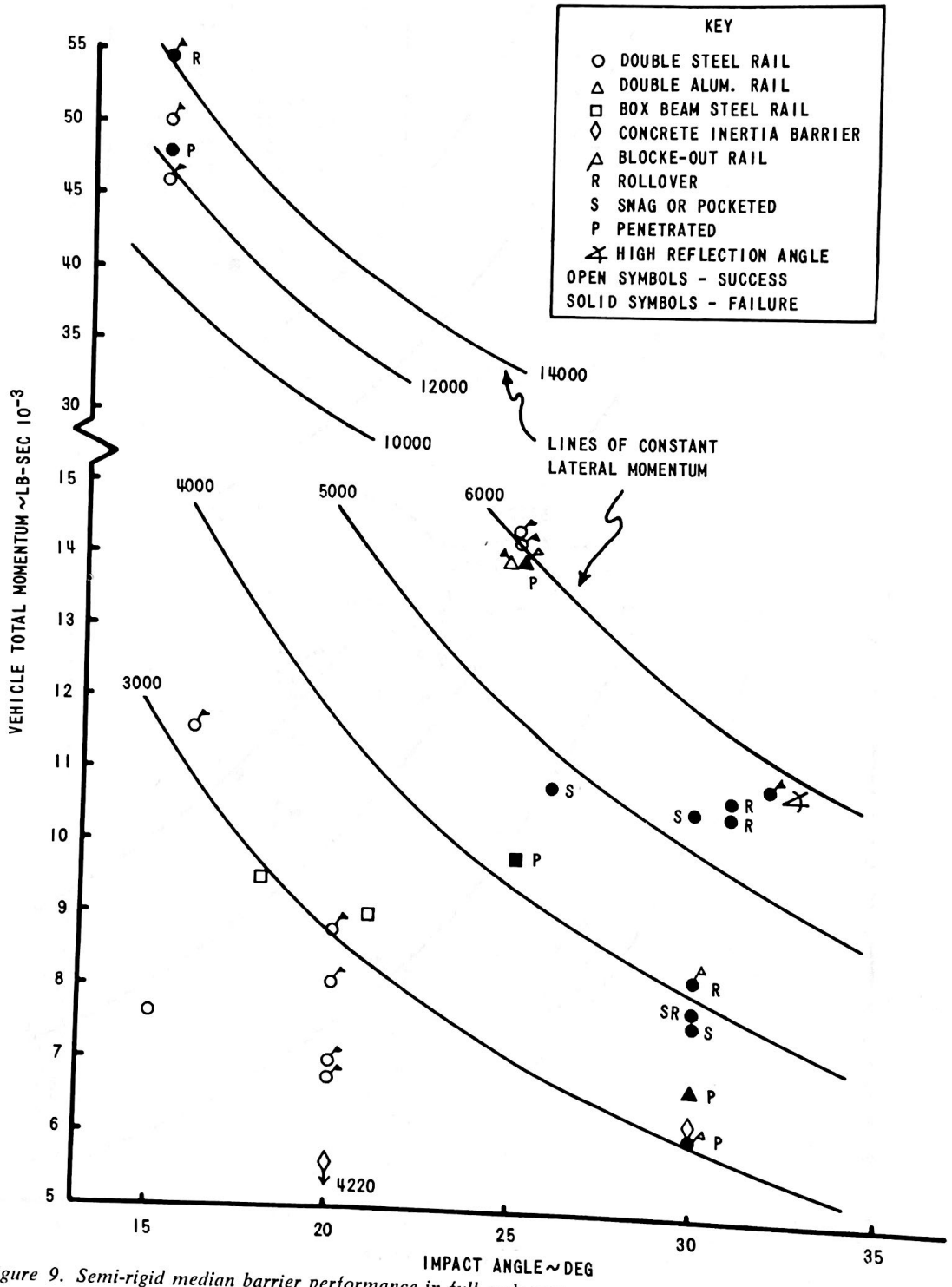

Figure 9. Semi-rigid median barrier performance in full-scale tests.

dynamic tests. The tests by General Motors (*1*) showed the importance of anchoring the ends of the rails and of making the barriers long enough to enable the full tensile strength of the rail to be developed. Based on the results of these tests, it was concluded that adequate beaming strength was not obtainable at post spacings of 12½ ft under severe impact conditions and a spacing of one-half that amount was recommended.

Test results obtained by California researchers (*19, 20*), who, like General Motors, favor wooden posts to support the rails (because they appear to be more resilient in earth

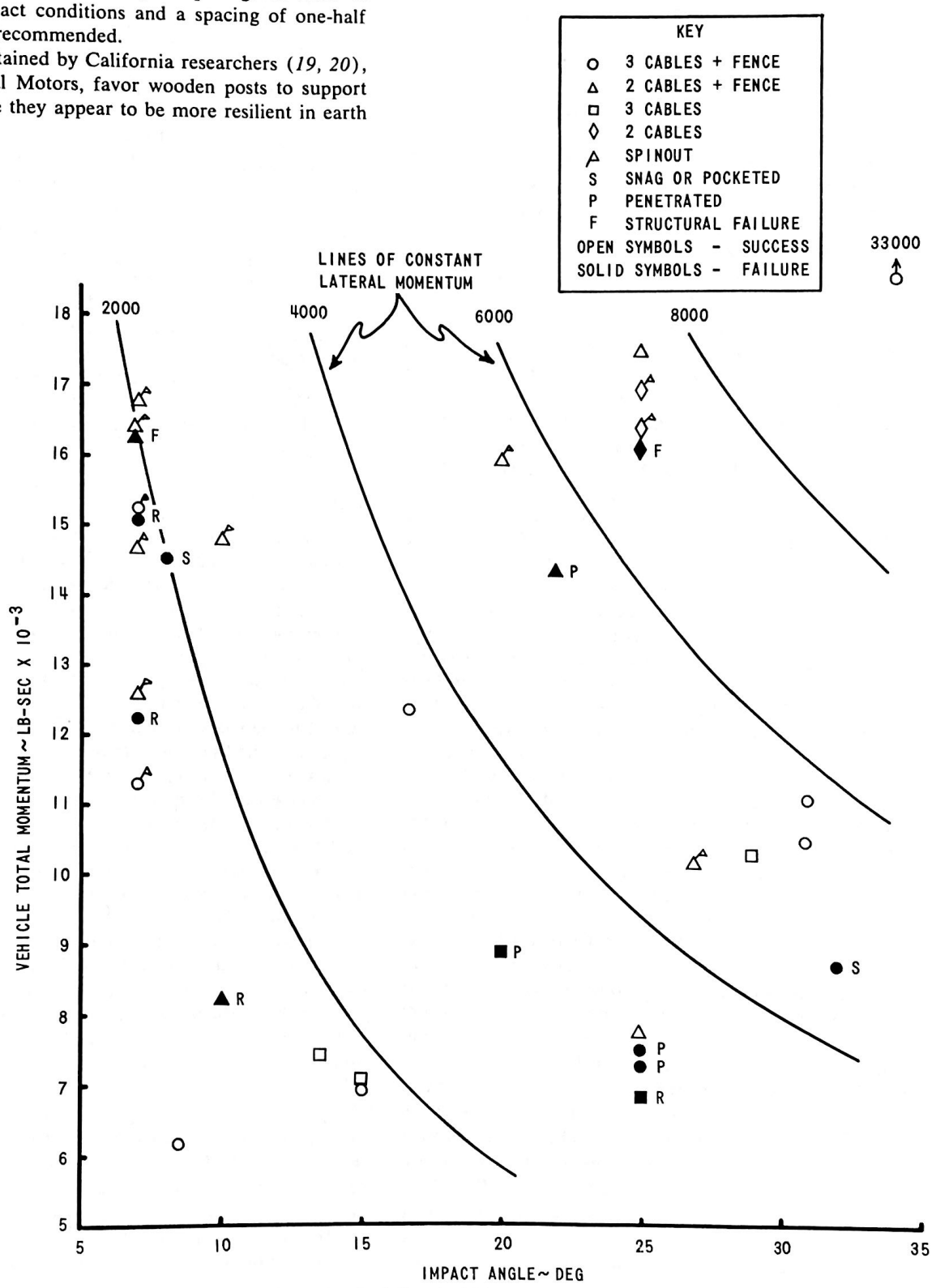

Figure 10. Flexible barrier performance in full-scale tests.

under dynamic loading and less variable in strength with direction of loading than steel H-section posts), also showed the need for compatibility between beam height and post spacing to achieve good barrier performance. It was concluded that long spans (12½ ft) result in inadequate lateral and torsional stability of the beams, causing them to twist or to be pushed over to form a ramp that permits the vehicle to penetrate or vault over the rail when impacted by vehicles having a speed of about 60 mph and approaching at an angle of 25 degrees. For this reason, a beam height of 26 to 27 in. above the ground and a post spacing of 6¼ ft was recommended for guardrail installations.

The double blocked-out beam median barrier design developed by California has been found to be very effective. In this design, the rails are offset from the posts approximately 8 in. and are mounted at a height of 30 in. above the ground on wooden posts on 6¼-ft centers. An auxiliary rubbing rail attached directly to the posts beneath the corrugated beam prevents the wheels or parts of the body forced under the beam from snagging on the posts. Blocking out the rails not only increases the clearance between the vehicle and the posts but also tends to maintain or slightly increase the height of the rail when the posts are forced back. This latter effect, combined with the increased initial height of the rail, helps to prevent rollover of the impacting vehicle. British and European versions of the blocked-out median barrier are somewhat different from the California configuration. The one described by Moore and Jehu (*32*) consists of rails blocked out 9 in. from the posts and mounted at a 27-in. height, which obviates the need for a lower rubbing rail. Midway between the posts, which are located on 10½-ft centers, wooden spacer blocks are bolted between the two rails to increase their stiffness without recourse to additional posts. This latter scheme has also been employed successfully in designs tested in Germany (*34*), where relatively light steel posts (smaller than 6-in. x 4-in. 8.5#) spaced on 13-ft centers were used.

Little information was found in the literature concerning relative performance of barriers with beams of different materials. Comparative tests of steel and aluminum rails reported by Reynolds Metal Company (*30*) indicated that barrier performance with aluminum rails was comparable to or somewhat better than that observed for steel rails. On the other hand, Field and Prysock (*20*) concluded from tests of greater severity (both higher speeds and impact angles) that aluminum alloy 2024-T3 in 0.125-in. thickness is unacceptable and in 0.156-in. thickness is questionable as a substitute for 12-gage steel in W-section beams of California double blocked-out median barriers. From their tests on guardrails, they also concluded that aluminum is an unacceptable alternate for steel beam rails. These conclusions were based on the finding that aluminum beams failed under the stresses produced by the impact, whereas the steel beams did not. Similar results of comparative tests at large (30°) approach angles to the barriers are reported by Boehringer (*34*). Consideration of all of these results leads to the conclusion that standard aluminum beams may be adequate in installations where impacts of a severity less than that corresponding to 60 mph and 15 degrees are assured.

Box-Beam Barriers

The results of only four tests of experimental box-beam median barriers have thus far been published (*7*), although many more unreported tests on guardrail, median, and bridge rail configurations based on this concept, have been conducted by researchers in New York, California, and at the University of Miami. In the four reported tests, two basic configurations were investigated. One was designed to resist vehicle penetration by its bending strength; the other had a much lower bending resistance and restrained the impacting vehicle by developing tension in the rail, which was connected to end anchors by cables. In each case the beam was supported on closely spaced weak posts in U-shaped saddles. Successful performance was observed in three of the four tests; the single failure resulted from a faulty cable splice in one test with the tension-box beam. Although it has been stated (*39*) that "to choose a steel rail of great strength and fix it to a rather weak post would not make sense," the results obtained in these tests prove to the contrary. The design allows the beam to deflect without pocketing and the weak posts are easily bent over if contacted by the vehicle, which prevents abrupt stops due to snagging. Reported reflection angles are also very small, thus preventing the impacting vehicle from becoming a hazard to other traffic.

Cable-Type Flexible Barriers

California has done considerable developmental testing of the cable-chain link flexible barrier. The behavior of this type of median barrier under various impact conditions has been fairly well established. In the original design, this barrier consisted of two ¾-in. steel cables at a height of 30 in. above the ground and a single cable at 9-in. elevation, all held to light steel posts by U bolts, and a chain link fence contained under the cables and additionally supported by tie wires. Initial tests of this barrier design (*19*) were conducted primarily at high approach angles and the results obtained were encouraging. However, operational experience with this design indicated that at small approach angles and high speed the combination of the lower cable and the firmly secured fence, contained under one of the upper cables, served as a ramp. The impacting vehicles were in danger of penetrating the barrier and tended to ride the barrier down (*14*).

Some tests to correct some of the deficiencies in the design showed that, if the cables were not stripped from the posts easily or if the fence, which gathers ahead of the vehicle, becomes jammed at a turnbuckle, the impacting vehicle is abruptly decelerated and undergoes a violent spin-out. This condition was also observed in tests by General Motors (*1*) and the British Road Research Laboratory (*32*).

In further subsequent full-scale dynamic tests on revised designs conducted by California (*26, 27*), it was concluded that the performance of the barrier was not adversely affected by the deletion of the chain link fence and that cable height was a critical factor and should be between 27 and 30 in. above the ground, depending on the median profile.

As may be noted from Table 6 and Figure 10, one of the characteristic reactions of vehicles impacting barriers of this design is a violent spinout at the end of the collision process. According to Field (*26*), the violence of the spinout appears to increase with decreasing angle of approach, although the problem exists also at high-speed, high-angle impacts. This unfavorable reaction, which leads to unbelted occupants being ejected from the automobile in a collision with the barrier, has been a leading cause of injuries and fatalities. Another potential hazard noted from the tests, although not evidenced in operational experience, is that the vehicle is sometimes pierced by the posts, which are bent over ahead of the vehicle by the cables as it slides along the barrier, in high-speed, high-angle impacts.

Other reported test results of cable-type flexible barriers are quite limited. The designs tested by Cornell Aeronautical Laboratory (*31*) and the British Road Research Laboratory (*32*) indicated satisfactory performance, although sufficient information is not available to evaluate the overall performance of these designs for a wide variety of impact conditions. The results of tests reported by Kummer (*33*) of a guardrail configuration employing light post structures that resist the forces of impact by means of anchor cables clamped to each post show marginal performance even under relatively mild impact conditions.

CURRENT RESEARCH PROGRAMS

There are several different approaches represented in current programs of research related to guardrails. Included are full-scale crash tests, collection of accident data, physical scale-modeling, and mathematical modeling (i.e., computer simulation).

In the following, specific programs are discussed briefly. It should be noted that these brief discussions and any opinions expressed by the authors are, in most cases, based on fragmentary information.

Stevens Institute of Technology

A research program carried out at Stevens Institute of Technology concerning the safety and collision dynamics aspects of the New Jersey concrete center barrier is nearing completion. The scope of the work in this program includes: (1) studying the effects of existing barriers on traffic safety; (2) collecting available accident and traffic data and analyzing these data by statistical techniques to develop conclusions relative to the probable influence of the barrier on traffic safety; (3) studying structural aspects of the barriers, including materials, placement, and structural adequacy; (4) studying the dynamics of collisions with barriers both by scale-model tests and mathematical simulation, and validating the mathematical models by correlation with the scale-model and known full-scale information; and (5) establishing recommended guidelines for the design of future barriers. A unique aspect of the research has been the use of physical scale-modeling techniques to study the detailed effects of variations in the size and profile of a rigid barrier.

In the view of the authors, the merit of physical scale-modeling of automobiles and guardrails in this instance is somewhat doubtful. In those cases where significant structural deformation occurs in the vehicle, a realistic scale-model of the vehicle, including an adequate simulation of the full-scale sheet-metal structure as well as the running gear and suspension, would appear to be a more expensive test device than a full-scale automobile (i.e., an automobile that is four or five years old and is purchased in small quantities). In cases where there is little or no structural deformation in the vehicle, the scale-modeling task is less difficult. On the other hand, there is also the possibility, in this instance, of repeated use of a single automobile in full-scale testing.

As far as the guardrail itself is concerned, it would seem that a realistic scale-model would necessarily be subjected to structural damage equivalent to that of its full-scale counterpart. The reduced material costs for construction and repairs would tend to be offset by a need, in metal structures, for special (i.e., nonstandard) structural shapes. In concrete median barriers, the occurrence of barrier damage in either full-scale or model scale would be infrequent.

With respect to instrumentation problems, the model-scale approach should be less costly than the full-scale approach in terms of ancillary equipment needs (i.e., wiring, test stations, etc.) and field operations costs. It should also offer the advantage of convenience, being performed in the laboratory. On the other hand, if it is desired to measure such things as force, deflection, acceleration, etc., at localized points on the scale model, the need for miniaturized sensors becomes obvious.

Aside from considerations of cost and convenience of test operations, the fundamental question raised with any kind of model testing is the question of scaling laws. Judging from experience in other fields, notably aerodynamics and hydrodynamics, the validity of the scaling techniques developed is often a result of a considerable effort involving modifications to the scaling laws and test practices by direct comparison with full-scale results.

It would be premature at this time to offer an over-all judgment of the merits of scale-modeling techniques in research related to guardrail design. Perhaps the final report on the Stevens research program will clarify some of the questions raised here and reveal unrecognized advantages in physical scale-modeling of guardrails and automobiles.

New York State Department of Public Works

The current program by the New York State Department of Public Works is a continuation of the research reported in May 1963 (*7*). The objectives are consistent with the recommendations of the previous report (i.e., modifications to improve the performance of existing guardrail and bridge rail designs, investigation of construction and maintenance problems in the new designs developed during this research, dynamic testing of posts in soil, etc.)

The recent portion of this program has included full-scale crash tests, collection and analysis of data from guardrail accidents, and mathematical modeling (i.e., computer simulation of vehicle-guardrail collisions).

A highly significant aspect of the recent work is the re-

search related to the properties of posts in soil. Post properties are, of course, a fundamental aspect of guardrail properties and performance. Yet, there has been little known definitive work performed previously to establish post properties in varieties of soil types and climatic conditions. A part of the NYS work has been aimed at the development of post designs with minimum sensitivity to soil properties and climatic conditions (e.g., spade ends on posts with relatively low yield loads in bending).

The mathematical modeling work has consisted essentially of additional applications of the previously reported simulation program.

Cornell Aeronautical Laboratory

A new program of related research has recently been started, entitled "Determination of Physical Criteria for an Energy Conversion System" (sponsored by the Traffic Systems Division, Bureau of Public Roads). The specific objective of this research project is to develop analytical procedures (i.e., computer simulations) with which the energy conversion characteristics of various forms of roadside cross sections and structures can be compared and can be related to vehicle property damage. The over-all objective of the research program "Single-Vehicle Accident Minimization, Rural Highways," of which this project is a beginning, is to reduce both the incidence of injury-producing accidents and the economic loss due to property damage that occur in collisions between single vehicles and fixed objects on or near the roadway in existing rural highways. The eventual means by which this over-all objective is to be accomplished is the modification of highway and vehicle elements so that the kinetic energy of the moving vehicle is converted into redirected motions and/or dissipated in a controlled fashion.

A particular difficulty with purely experimental approaches to guardrail development stems from the prevalence of nonlinearities and the over-all complexity of the systems, which preclude extrapolations and becloud interpretations of test results. A validated analytical simulation, such as that to be developed in this research program, can provide a unifying theoretical framework for correlating the results of experimental studies that have utilized diverse test procedures. It will also have specific advantages over other approaches in the forms of (1) the capability of relatively rapid and inexpensive exploratory variation of idealized parameters for the establishment of optimum system characteristics, (2) the ability to repeat identical impact conditions while changing a single system parameter, and (3) the ease of obtaining comprehensive output information to clarify dynamic interactions that occur within the complex, nonlinear system and thereby provide insight for developing system improvements.

California Division of Highways

The California Division of Highways has recently completed a study of freeway accident data with the objective of relating accident rates and severity to fill height, steepness of side slope, frequency of fixed objects, clearance to fixed objects, and presence of guardrail. A report* presenting the results of this research has been prepared but has not yet been released for public distribution. Some full-scale dynamic tests on the New York box-beam barrier design have recently been carried out, but the results are as yet unpublished.

University of Miami

A testing program is currently being carried out at the University of Miami in a cooperative effort with aluminum manufacturers to develop an aluminum box-beam barrier patterned after the New York design. The aluminum beam rails, mounted on 3-in. I steel posts are being tested at speeds of 65 mph and approach angles of 25 degrees. No results have yet been reported.

Another series of tests is to be conducted to obtain data on impacts with aluminum, steel, and concrete light standards and poles. The data will provide information useful in showing the relative hazard of these fixed objects for guardrail warranting considerations.

Texas Transportation Institute, Texas A & M University

Research related to the safety aspects of fixed objects along the roadway is currently in progress in a program of development of design criteria for break-away-type sign supports. In other phases of the reseach program, investigations are being made of the impact behavior of various types of lighting standards and the feasibility of impact attenuation systems to be used in conjunction with fixed objects which cannot be permitted to yield or break away. The latter phases of this research have only recently begun.

Pennsylvania Highway Department

The Bureau of Traffic of the Pennsylvania Highway Department is engaged in a study with the objective of evaluating the performance of double blocked-out steel rail median barriers installed on the Schuylkill Expressway with respect to prevention of median crossings, damage sustained in major and minor vehicular contacts, and the reduction of both the frequency and severity of accidents. Data are acquired by photographing the rails periodically to evaluate and classify the various types of rail damage (e.g., "brush hits," dents, moderate or severe damage, or penetration), and from analysis of maintenance records and accident reports. Progress to date is unreported.

The Warnock Hersey Company, Montreal, Canada

In correspondence received from this company, it was stated that they are preparing two research programs but are not certain that they will be carried out. The first would be an analysis of the use of precast concrete sections as a median barrier for divided highways with a narrow median. The study would involve the determination of the size of key necessary between each section, the type of anchor and the depth at which it must be embedded in the soil to

* "An Objective Basis for Determining Guard Rail Need at Embankment and Freeway Fixed Object Locations," by J. C. Glennon and T. N. Tamburri.

hold the section in place, and a cost analysis of the system for comparison with other type median barriers.

The second program being considered is a study to obtain a safe traffic nose (gore) for elevated highways. In this study, various systems now in a preliminary design stage would be tested to evaluate their performance in reducing the hazards that are found in existing gores.

Organization for Economic Cooperation and Development (OECD)

In early 1965, the OECD organized a Crash Barrier Group comprised of representatives from 12 countries for the purpose of increasing international cooperation for the improvement of crash barriers (guardrail, median barriers, and bridge railing) and thereby make a broad and mutually productive contribution to highway safety. Chairman of this group is C. W. Prisk, Deputy Director, Office of Highway Safety, Bureau of Public Roads. The work of this group, being done in three stages, is very similar to that performed under the study reported herein. The three stages of the OECD Crash Barrier Group effort are (*40*): "(1) Assembly of technical information on the current practices, standards and specifications, warrants for use, and available research findings or reports of current research; (2) Sharing and comparing of laboratory and field tests among the participating countries; and (3) Evaluation of the needed lines of inquiry and the design and conduct of a cooperative international research and development program."

The results of the OECD study should provide a more comprehensive and definitive picture of the present state of the art of barriers than was possible to achieve under the program reported herein, because the international representation in the group establishes a more direct line of communication with the agencies performing guardrail research in the various countries for obtaining the needed information. A report on the first stage of the work is in preparation.

Foreign Current Research Programs

Although correspondence with individuals and agencies in foreign countries indicated that research pertaining to highway barriers was being conducted, no descriptions of these investigations as to the scope and objectives of the investigations or the current status were supplied. However, information was obtained (*40*) on two investigations being performed by the Institut für Strassen- und Untertagbau of Zurich, Switzerland. One program is concerned with the development and validation of a mathematical model(s) for investigating the dynamics of barrier collisions analytically. The second program is aimed at obtaining more accurate and factual data on the usefulness of guardrails under different conditions (i.e., determining the difference between the consequences of hitting a guardrail or allowing the vehicle to encounter various obstacles and other hazardous situations). Data obtained from accident investigations for accidents occurring on different types of roads having different traffic speed and volume characteristics and roadway geometry will be analyzed for the required information. Because of the great number of similar accidents involving collisions with each type of obstacle (slopes, watercourses, buildings, poles and trees, and guardrails) that must be evaluated to obtain results of statistical value, the program is expected to require several years to complete.

CHAPTER THREE

CONCLUSIONS AND RECOMMENDATIONS

During the course of the reported research, certain gaps have become apparent in the available data related to the actual performance of guardrail installations. Also, shortcomings have been found in reported data from staged collisions when direct comparisons of test results were attempted. A need has been seen for more factual evidence regarding the hazards of roadside obstacles and terrain features, in order that the relative hazards of guardrails can be evaluated and warrants can be issued that are based on scientific comparisons. That is, warranting methods should be developed that are designed to improve on accepted practice and/or engineering judgment. With the exception of a New York State research program, guardrail design and development has been found to be essentially an empirical process that has persisted in an age of technology. A need is seen to convert existing research findings into directly usable design techniques. Finally, a need is seen for a continuing program of analysis and testing of unconventional concepts, for the purpose of providing objective evaluations of specific concepts as well as guidance for future developments.

These topics are discussed in more detail in the following sections.

THE NEED FOR MORE COMPREHENSIVE ACCIDENT DATA

A definitive evaluation of the state of the art of guardrail design must include measures of the performance of actual highway installations. Although there are some limited data available on accident experience with rural guardrails,

it is generally believed that many low-severity contacts go unreported. It is therefore impossible, on the basis of available data, to assess over-all performance.

The unreported impacts could logically be categorized as "successful" cases, or "good" performances, where vehicle damage was presumably of a sufficiently minor nature to permit the vehicle to be driven away from the scene. In general, the reported cases include relatively large percentages of "unsuccessful" impacts, or "unsatisfactory" performances, where major damage and serous injury have occurred. It therefore appears essential that a measure of the number of unreported minor-severity contacts be obtained so that the "unsuccessful" cases can be related to over-all accident experience. It should be noted, however, that in the case of unreported impacts the low end of the severity range may include many contacts in which the forces generated by the guardrail were not sufficiently large to appreciably influence the motions of the vehicle. In other words, the motions of the vehicle would have been essentially the same in the absence of a guardrail. Therefore, it may be necessary in a realistic assessment of the performance of guardrails to place a lower limit on the range of severity to be included.

The currently available data on guardrail impacts indicate a high failure rate. If the reported contacts represent a large percentage of the total contacts in which the guardrail appreciably influenced vehicle motions, the state of the art must be viewed as less than satisfactory.

STANDARD TEST PROCEDURES FOR GUARDRAILS

Although there has been much excellent experimental work performed in connection with guardrail design, there exists an important need for the development of standardized test procedures, instrumentation, and reporting of results. Such standards should not, of course, limit research-type testing. Rather, they should provide a basis for direct comparisons of performance. This need becomes apparent when an attempt is made to compare results obtained by different investigators.

The present situation in guardrail research tends to produce individualistic and sometimes fragmentary reporting of results that have been obtained with a variety of test procedures and instrumentation. In some cases the individual selections of significant aspects of the findings reflect a bias toward particular designs or materials. In fact, a strong case can be argued for the development of a completely objective "certification" type of procedure by which minimum standards of performance can be assured for all alternative designs and/or materials that are considered for new installations.

The proposed development of a standard test procedure should, of course, utilize the extensive experience of organizations that have been engaged in full-scale test programs on guardrails (e.g., New York State Department of Public Works, California Division of Highways, General Motors Proving Ground, Cornell Aeronautical Laboratory). An attempt should be made to find a consensus on vehicle guidance, speed control, instrumentation, length of barrier sample, point of impact relative to post positions, post-in-soil aspects, repeatability runs, etc. It should be noted that in some test programs the front wheels have been restricted to the straight-ahead position (*24, 25*) or controlled by a form of power steering (CAL, NYSDPW, California). In other cases (e.g., *18*), the steering angles of the front wheels have been unrestrained during and after impact. These differences in the control of the front wheels would appear to have significant effects on responses, particularly on the reflection angle. Another aspect of vehicle control which would appear to exert a strong influence on responses is the selection of either (a) a brake application, or (b) full-throttle acceleration during the time of impact and reflection.

The speeds, angles, and vehicle sizes to be included could also be determined by consensus. However, it would appear to be highly desirable to relate the test conditions to real accident situations, in terms of the percentile of total reported off-road deviations, on a specific roadway type, with which the test conditions can be identified. This general approach to the selection of speeds and angles would permit flexibility in the test procedure, so that it could be applied to guardrail configurations for urban streets as well as for rural roads and for the interstate system. Figure 11 shows percentile curves of the sort that might be developed from more extensive and comprehensive collection of accident data. It is conceivable that the rural road case might be subdivided into interstate and secondary, although there are insufficient data available at present to establish any differences that may exist. It is assumed that the case of urban streets will be significantly different from that of rural roads. However, there are no known applicable data available for urban streets. It is proposed that boundary curves of the type depicted in Figure 11 could be obtained by applying a least-squares curve fit to points that equal or exceed the given percentage of reported speeds at each impact angle in a comprehensive collection of accident data.

If the percentile curves can be established for the rural and the urban situations (with the rural case possibly subdivided into interstate and secondary roads), test conditions can be selected from each percentile curve. In this manner, an "85th percentile test series—rural, secondary" will be readily understood as a series of test conditions that encompass the impact conditions involved in 85 percent of reported accidents on rural secondary roads. A test series might consist of two or more specifically defined points on a given percentile curve. It would appear to be desirable to include repeatability runs in a "certification" test series. Also, an additional test of minor-severity snagging characteristics would be desirable, because some barrier designs have been found to increase the severity of accidents where low-angle, low-speed brushing of the barrier occurs (*1*).

There are certain types of collision responses in which the barrier does not function as designed. These responses should be categorized as "failures" of the barrier, even though the resulting vehicle response may not be catastrophic. For example, no barrier is designed to "pocket" the vehicle, to permit penetration, or to produce rollover of the vehicle. Therefore, these three types of response should be categorized as failures. Where none of the described failures occurs, there is a wide range of per-

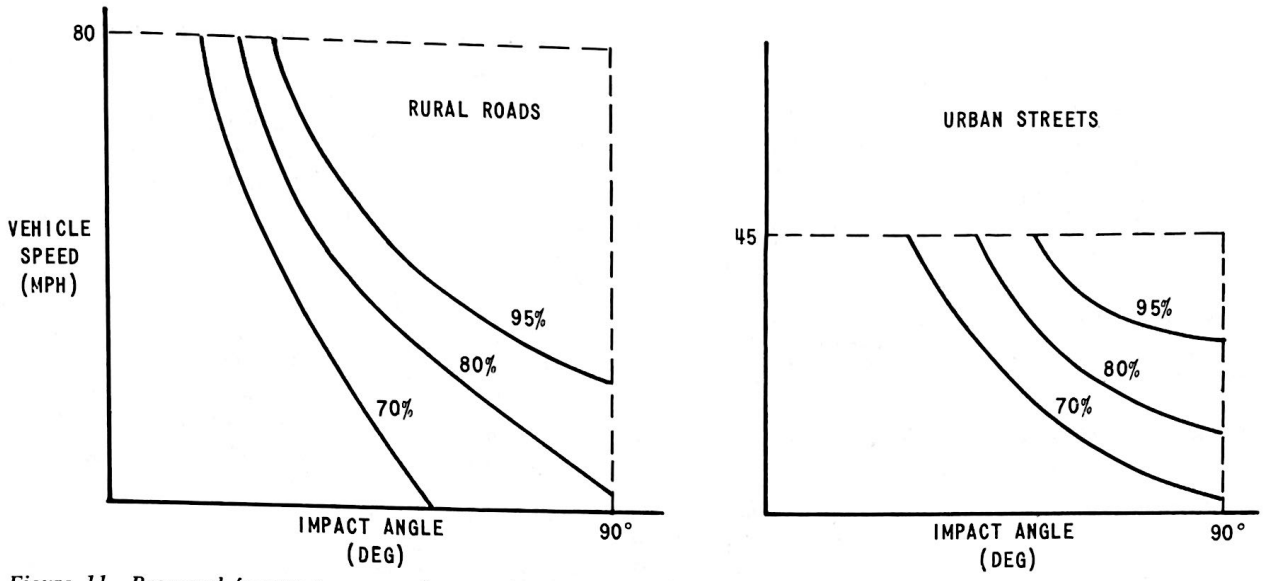

Figure 11. Proposed format to summarize actual experience with off-road deviations.

formance possible. It is therefore essential that means be developed for directly comparing "successful" performances. It would also appear to be desirable to develop weighting factors for each aspect of performance in relation to particular types of installations so that a recommended practice in barrier selection could be applied to the results of standard tests.

Figure 12 shows a preliminary concept for a standard performance chart. The charts are aimed at ease of comparisons. The acceleration-duration plots could possibly be obtained from measured-time histories of accelerations in the manner described by Rothe, et al. (*41*).

Presumably a new design or a design change is aimed at either (1) raising the "threshold of failure," (2) improving performance within the "successful" range of existing barrier designs, or (3) reducing costs while retaining both the failure threshold and the performance of existing designs. Comparison plots of the type shown in Figure 12 would facilitate the proof of performance claims. A significant increase in the threshold of failure might permit the certification of a design configuration for a higher percentile curve.

On first examination of the guardrail impact problem, it seems logical to assume that the lateral momentum of the vehicle at impact might be a good measure of the severity of the impact and, therefore, a constant value of lateral momentum would appear to define the "threshold of failure" of a particular barrier design. The findings of this

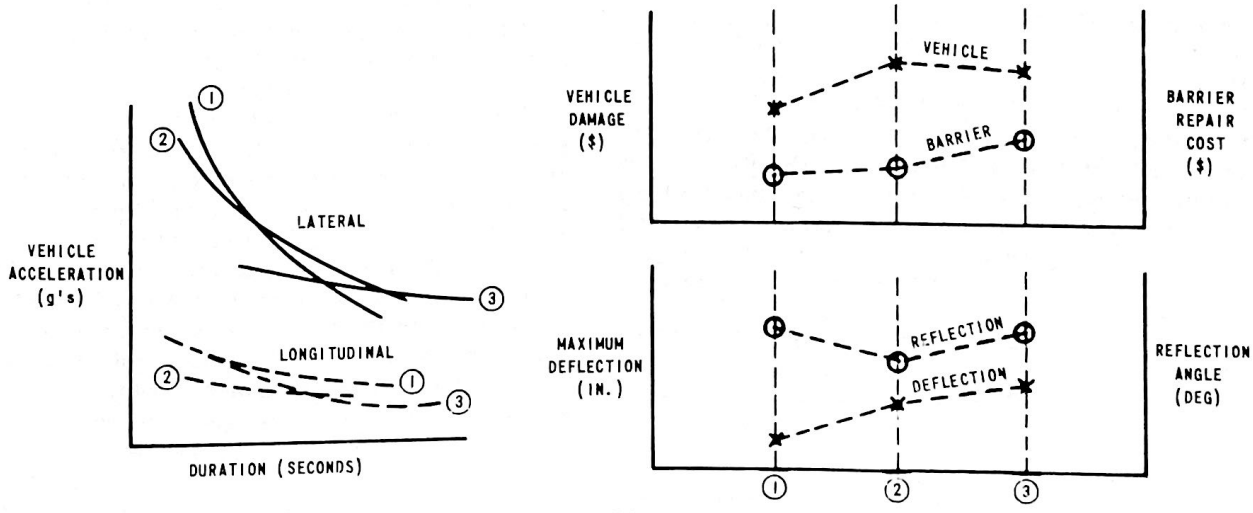

Figure 12. Concept of standard performance chart for staged barrier collisions.

study indicate that the "threshold of failure" is not likely to follow a plot of constant lateral momentum. Application of the proposed standard test procedure will tend to generate well-defined "failure" data. Instances of inadvertently selected test conditions that are excessively severe for specific barrier designs to indicate thresholds of failure would also be well defined and thus of value in seeking to establish the performance limits. These data would provide a valuable measure of the thresholds of failure of existing guardrail designs as related to percentile curves. It would thereby provide a direct measure of the level of protection that is being provided.

FACTUAL EVIDENCE ON ROADSIDE VS GUARDRAIL HAZARDS

Logically, the hazards associated with the specific roadside terrain profile and obstacles should be directly compared with those of collisions with guardrails when a decision is made regarding the need for a guardrail installation. At the present time, of course, this sort of comparison is impossible for lack of applicable data.

The Cornell Aeronautical Laboratory is currently approaching the problem by means of engineering analysis and computer simulation under a contract with the Bureau of Public Roads. The most fruitful additional research would appear to be a concurrent program of collection and analysis of applicable accident data.

It is conceivable that existing ACIR and other data on single-vehicle accidents can yield preliminary measures of the relative severities of accidents involving roadside hazards and those involving guardrails. Also, a review of the existing data would be expected to reveal shortcomings that could be remedied in a special program of data collection aimed specifically at measurement of relative severities and hazards.

ANALYSIS OF THE DYNAMIC PROPERTIES OF GUARDRAIL STRUCTURES

Analytical investigations related to guardrail design have been quite limited (*7, 29*). Nearly all of the existing designs have evolved with little benefit of extensive engineering analysis. The present state of the art of guardrail technology is a result of a relatively slow evolutionary process. It is easy to understand how, in the past, the complexities of the vehicle-guardrail impacting dynamics discouraged the application of classical analytical methods. However, the development of high-speed computing techniques over the past two decades makes it possible to remove this stumbling block towards the use of more sophisticated analytical methods. Indeed, the use of computing techniques has figured prominently in several recent research programs (e.g., the CAL and New York State work).

Focusing for a moment on the moving element in the roadway-guardrail-vehicle system—the vehicle itself—it can be said that little has been accomplished in vehicle design that reflects a "systems" approach to the problem. The structural portions of the modern automobile that interact with a guardrail on impact have apparently been designed with little consideration of a potential guardrail collision. The required structural properties of the vehicles are therefore poorly defined.

It is not intended to suggest that analytical studies can eliminate the need for experimental development programs. However, it seems obvious that the time and costs of development programs can be minimized by means of validated analytical techniques.

The analytical aspects of the barrier research being performed by NYSDPW have demonstrated the feasibility of analytically evaluating barrier designs. Such analytical evaluations can be used to (1) reduce the required number of full-scale crash tests, (2) determine the relative importance of barrier design parameters so that increased efficiency can be achieved in the use of structural materials, (3) guide design modifications for specific applications, and (4) evaluate proposed barrier designs.

It would appear to be worthwhile to pursue the analytical approach further from two separate points of view. In the first, the existing theoretical treatment should be extended and made more comprehensive. In the second, the findings of the analytical and simulation studies should be incorporated in directly usable design techniques.

The latter type of analytical effort could consist of defining acceptable lateral load-deflection characteristics and acceptable ranges of deviation at various positions relative to posts. Standardized and validated quasi-static procedures of design analysis will be required to permit the designer to achieve the defined lateral characteristics.

As previously mentioned, the former type of analytical effort is currently being carried on by the Cornell Aeronautical Laboratory. Although that program is concerned with roadside cross sections and structures in general, it will necessarily include some consideration of guardrail impacts.

ANALYSIS AND TESTING OF UNCONVENTIONAL CONCEPTS

At present there are continuing programs of guardrail development, including full-scale crash tests, being carried on by the States of New York and California, and the University of Miami. However, these programs, for the most part, are concerned with relatively conventional guardrail configurations, such as modifications in existing designs. This limitation of the programs is considered to be entirely proper in view of their objectives.

There is a need for an additional program of continuing research that will have as its objective the exploration of new and unconventional concepts. Publicity is frequently given to unconventional concepts such as the "Isle Guard" rigid barrier, those consisting of inclined posts with integral hydraulic dashpots (*42, 37*), and the concrete "inertia barrier," and there is no established means for obtaining an objective evaluation of the claimed advantages. Although many such concepts may involve prohibitive installation and/or maintenance costs for general use, they may offer performance benefits that would constitute solutions for special application problems. A continuing program of analysis and tests of unconventional concepts would also be expected to yield findings that would provide valuable guidance in future developments of the more conventional types of barriers.

CHAPTER FOUR

AN OUTLINE OF ADDITIONAL NEEDED RESEARCH

The contract under which the present study was performed requires the preparation of an outline of a tentative proposal "for undertaking and conducting additional needed research." A general discussion of the question of needed research has already been given in the previous chapter. In the light of this discussion, it is recommended that an appropriate agency of the Federal Government undertake a long-term program of research to satisfy these needs. The program should be implemented in such as way as to take maximum advantage of the excellent work that has already been accomplished in several of the States and by a few private organizations in this country, and by both private and government agencies abroad. These widely diversified efforts point up the need for a broadly concerned program, carried out under Federal auspices, that is aimed at solving a national problem, while at the same time not inhibiting research programs that are currently being carried out by individual States. The program, in fact, should be designed to augment rather than to displace the research now being conducted by several of the States.

The broad objectives of such a program may simply be stated as follows:

1. To institute a comprehensive program of data collection that will result in better definitions of the speeds, impact angles, vehicle types, and roadside hazards associated with single-vehicle accidents on specific roadway types.
2. To use these data as the basis for evaluating the performance of existing barrier designs and for establishing scientific warranting procedures.
3. To establish a standard test procedure and reporting format to be used in guardrail testing. It is suggested that a Federal standard or a recommended practice for guardrail testing and test reporting should result from this effort. Support for such a standard should be sought from existing agencies (e.g., AASHO or the BPR) or a future agency (a Department of Transportation), with interstate authority.
4. To conduct a program of engineering anaylsis for the purpose of arriving at a "recommended practice" in guardrail design. The recommended practice would incorporate the best technology that the state of the art permits. It would be subject to periodic revision as new research findings are produced by the individual States and by the executors of the long-range program outlined herein. As in the case of the standard test and reporting format, the recommended practice should be sponsored by an organization with interstate authority.
5. To conduct a continuing program of analyses and full-scale testing aimed at advancing the state of the art of guardrail design. New and unconventional concepts should be explored in an effort to uncover designs and practices that, at any given time in the program, are not being adequately investigated in State-conducted research.

A program plan that is designed to achieve these general objectives is given in the following in the form of five major tasks.

TASK I—COLLECTION OF SINGLE-VEHICLE ACCIDENT DATA

In a special program of accident-data collection, an attempt should be made to obtain detailed data from nearly all single-vehicle accidents in areas selected for "saturation" coverage. The selected areas should include sections of the Interstate system, rural highways, and urban streets. The objectives of this research would consist of the following:

1. *Definition of the speeds, angles, and vehicle types involved in off-road deviations on specific types of roadway.* This information would be used to develop percentile curves on plots of vehicle speed vs impact angle (i.e., curves that encompass given percentages of the total accident experience on the specific roadway type).
2. *Measures of the performance of actual guardrail installations.* By obtaining more comprehensive data on barrier contacts, it would be possible to relate the cases of "unsuccessful" barrier performance to the over-all contact experience. The predominant failure modes of various guardrail types would be identified.
3. *Supporting data for weighting factors to be used on the various aspects of guardrail performance, in relation to selections for particular types of installation.* For example, data on secondary collisions that follow contacts with specific types of guardrail installations on the various roadway types would appear to be quite useful in the selection of a weighting factor for reflection angle when the selection of a guardrail design is being made.
4. *Comparison of the hazards of specific roadside terrain profiles and obstacles with those associated with guardrail impacts.* It is anticipated that a relatively large sample will be necessary in this case to yield conclusive results, because of the large number of variables that can influence each accident. This aspect of the proposed data collection is aimed at the development of factual evidence for use in the evaluation of the need for guardrail installation.

This phase of the research plan could begin with a review of existing ACIR* and other data on single-vehicle accidents. The review could conceivably provide preliminary measures of the foregoing items.

The ACIR files contain approximately 10,000 cases of single-vehicle accidents.) On the basis of the present research, it appears likely that shortcomings will be revealed in the existing data that could be remedied in the special program of data collection that is proposed.

* Automotive Crash Injury Research project, Cornell Aeronautical Laboratory.

Various ideas would be reviewed for the purpose of achieving more comprehensive reporting. For example, it has been suggested that periodic photographic coverage of a freshly-painted railing might be an effective means of detecting the occurrence of unreported contacts. The feasibility of developing simple sensors to detect guardrail contacts and/or off-road motions would be thoroughly investigated. It would appear that toll roads might offer special opportunities for detection. For example, a visual inspection for vehicle damage could be made at entrances and exits and coded toll cards could be provided in cases where damage is present at an entrance.

The foregoing discussion is intended simply to outline the scope of the proposed task. The authors are fully aware of the complexities involved in acquiring the described information. The task is one of considerable magnitude. Yet, without such information there is little in the way of a rational basis for providing an accurate evaluation of existing designs.

TASK II—STANDARD TEST PROCEDURE AND REPORTING FORMAT

On the basis of a review of the various test procedures that have been used in guardrail research, the associated instrumentation, and the reporting format, a standard test procedure should be drafted. This procedure should eventually be issued under the auspices of a Federally-oriented agency with interstate authority. A primary objective would be simplicity. The draft would be submitted to the various organizations that have performed full-scale testing for their comments and suggestions; a consensus would be sought. It should be noted that the selection of actual impact conditions may depend on analysis of data collected in Task I for various types of roadway.

The developed test procedure would be applied to at least two types of barrier designs (e.g., W section, cable). The repeatability of the standard tests would be determined, and comparisons of performance would be presented on standard performance charts that would constitute a part of the reporting format. The results of the test series would be submitted to the same organizations that were previously consulted on the draft of the procedure. Further comments and suggestions would be sought.

A summary report would be prepared in which a "recommended practice" in guardrail testing would be presented. Background information, criticism, and comments that led to the final recommendations would also be presented.

As a supplement to the recommended practice in testing, a tentative recommended practice in "weighting factors" for the individual aspects of performance in relation to particular types of installation should be prepared (e.g., maximum deflection, damage to vehicle, reflection angle, etc.) This portion of the report would be based on accident data collected in Task I.

In connection with a standard test procedure, it is anticipated that comparisons will be required between the front-quarter structural and dimensional properties of a cross section of the automobile population in use today (i.e., front vs rear engines, full-size vs compact, unit vs frame construction) in order that the test vehicle(s) can be selected. This sort of information will be generated by CAL under its contract with the Bureau of Public Roads. In that program, a special test facility is being designed to perform applicable measurements of the dynamic structural properties of automobiles.

A possible output of the proposed "standard test procedure" research could be the finding of significant differences among vehicles in relation to guardrail impact responses. If this turns out to be the case, it may become necessary, in relation to the development of improved guardrail performance, to explore the feasibility of developing specifications for the interacting portions of automobiles.

TASK III—ENGINEERING ANALYSIS

The vast majority of existing guardrail designs cannot be viewed as "engineered" products, in the sense of having been subjected to engineering analysis. Yet, the feasibility of applying analytical techniques has been demonstrated by the New York State Department of Public Works (NYSDPW). Also, a need is seen to summarize current research knowledge from testing in the form of engineering specifications.

Inasmuch as NYSDPW is actively involved in the simulation of collision dynamics and also a closely related program of research is currently being performed by CAL under contract with the Bureau of Public Roads, the present research plan is limited to the development of a "recommended practice" for application of the several existing types of structural configurations. The recommended practice would provide options to meet specific requirements and also to permit substitution of equivalent components or materials, where possible. In other words, this task would be primarily an attempt to convert existing research findings into a guide for engineering applications.

To permit the development of such a "recommended practice," it will be necessary to develop analytical techniques and procedures for extrapolation and interpolation of existing structural and performance data. The dynamic lateral load-deflection characteristics from successful tests would be determined and specified at a mid-span position and the range of deviation in the lateral characteristics for other positions would be examined. The findings of NYSDPW would be carefully reviewed, particularly the post-in-soil research performed, and their suggestions as well as those of others engaged in guardrail development would be sought in relation to the proposed recommended practice. Consideration would be given to the maintenance, visibility, and appearance aspects of guardrail designs, where applicable information is found.

TASK IV—ANALYSIS AND FULL-SCALE TESTS

Existing research programs are largely concerned with relatively minor modifications in conventional designs. The research on conventional designs should be continued and expanded, adopting a uniform test procedure and reporting format where possible. There is, however, no research program currently in existence within which unconventional

concepts in guardrail design and approach-end treatments are either analyzed or tested. The need for guidance of future developments, as well as the possibility of achieving the unique performance requirements of some special applications, would appear to justify a continuing program of research on new and unconventional concepts in barrier design and in approach-end treatments.

In the proposed research outline, a periodic selection should be made of unconventional concepts in guardrails. Engineering analyses should be performed in sufficient depth to permit selection of design parameters, where actual designs do not exist. Full-scale crash tests should be performed, including the standard tests developed in Task II. Research reports should be prepared in which the performance would be evaluated objectively. (The standard format for reporting performances to be developed in Task II would be used where applicable.) Estimates of installation and maintenance costs, and conclusions regarding the overall merit of a concept would be included in the related research report.

REFERENCES

1. Cichowski, W. G., Skeels, P. C., and Hawkins, W. R., "Appraisal of Guardrail Installations by Car Impact and Laboratory Tests." *Proc. HRB,* Vol. 40, pp. 137-178 (1961).
2. Stonex, K. A., "Roadside Design for Safety." *Proc. HRB,* Vol. 39, pp. 120-157 (1960).
3. "Highway Guardrail: Determination of Need and Geometric Requirements, with Particular Reference to Beam-Type Guardrail." *HRB Spec. Rep. 81* (1964).
4. Jehu, V. J., Personal correspondence.
5. *Guidebook for Construction of Guardfence.* Japan Road Assn. (1964).
6. Balz, R. T., "Grundsatze und Bedingungen für die Anornung von Leiteinrichtungen" (Principles and Conditions for the Installation of Crash Barriers). Inst. für Strassen- und Untertagbau an der ETH, Zurich.
7. "Development of an Analytical Approach to Highway Barrier Design and Evaluation." *Res. Rep. 63-2,* Phys. Res. Proj. 15-1, N.Y. State Dept. of Public Works (May 1963).
8. Matheis, C. W., "Design and Analysis of a Metal Bridge Railing." *Rep. No. VJ-1579-V-1,* Cornell Aero. Lab. (Oct. 1961).
9. Shoemaker, N. E., and Radt, H. S., "Summary Report of Highway Barrier Analysis and Test Program." *Rep. No. VJ-1472-V-3,* Cornell Aero. Lab. (July 1961).
10. Balz, R. T., "Erfahrungen mit Metall-Leitplanken" (Experience with Metal Guardrails). *Strasse und Verkehr,* No. 10, pp. 499-513 (Sept. 25, 1964).
11. "The Angle of Impact and the Impact Velocity of Accidents with Crash Barriers." Inst. für Strassen- und Untertagbau an der ETH, Zurich.
12. Bitzle, F. "Erfahrungen mit Stahleitplanken im Strassenverkehr" (Experience with Steel Guardrails in Road Traffic). Presented at Symposium on Steel Guardrails, Siegen (June 1963).
13. Hutchinson, J. W., and Kennedy, T. W., "Safety Considerations in Median Design."
14. Beaton, J. L., Field, R. N., and Moskowitz, K., "Median Barriers: One Year's Experience and Further Controlled Tests." *Proc. HRB,* Vol. 41, pp. 433-468 (1962).
15. Johnson, R. T., "Effectiveness of Median Barriers." Calif. Div. of Highways (Aug. 1964).
16. Sacks, W. L., "Technical Report of the Effect of Guardrail in a Narrow Median upon Pennsylvania Drivers." Pennsylvania Dept. of Highways (June 1964).
17. "Specifications—DAV Safety Guard Rails; DK 14/32/43, UN 94/90-3037.0." DAV International s.a., Zug, Switzerland (Feb. 1964).
18. Hénault, G. G., and Perron, H., "Research and Development of a Guide Rail System for a High-Speed Elevated Expressway." The Warnock Hersey Co., Montreal, Que. (1966).
19. Beaton, J. L., and Field, R. N., "Dynamic Full-Scale Tests of Median Barriers." *HRB Bull. 266,* pp. 78-125 (1960).
20. Field, R. N., and Prysock, R. H., "Dynamic Full-Scale Impact Tests of Double Blocked-Out Metal Beam Barriers and Metal Beam Guard Railing—Series X." Calif. Div. of Highways (Feb. 1965).
21. Zurchen, H., and Balz, T., "Typen, Berechnung und Wirkungseveise von Leitplanken" (Types, Calculation and Operation of Guardrails). Inst. for Road Construction at the ETH, Zurich, 2nd Suppl. Ed. (1963).
22. Kuhlman, H. F., and Sayers, V. M., "Report on Strength and Deflection Tests of Various Materials Used as Guardrail Posts. Part I," Calif. Div. of Highways (1957).
23. "Report of Tests on Highway Guard Posts." *Report No. 213945-A,* Pittsburgh Testing Lab. (May 1940).
24. "A New Design of Median Safety Barrier to Be Installed on Roadways." Vianini-Societa per Azioni, Rome, Italy (Feb. 1966).
25. "Report on Tests Carried Out on the Vianini-Autostrade Safety Barrier." Vianini-Societa per Azioni, Rome, Italy (Feb. 1966).

26. FIELD, R. N., "Dynamic Full-Scale Impact Tests of Cable-Type Median Barriers—Series VII." Calif. Div. of Highways (Mar. 1964).
27. FIELD, R. N., and JOHNSON, M. H., "Dynamic Full-Scale Impact Tests of Cable-Type Median Barriers—Series IX." Calif. Div. of Highways (June 1965).
28. PEARSON, L. C., "Specification for a Wire Rope Safety Fence for Installation on the Central Reservation of High-Speed Roads." *Note No. LN/799/LCP*, Brit. Road Res. Lab. (Mar. 1965).
29. AYRE, R. S., ABRAMS, J. I., and HILGER, M. A., "Dynamics of Vehicle Impact Against Highway Guardrails: Laboratory Experiments." *Tech. Rep. No. 5*, The Johns Hopkins Univ. (Dec. 1955).
30. "Dynamic Tests of Aluminum Guard Rails." Reynolds Metal Co., Richmond, Va.
31. SHOEMAKER, N. E., "Test Report for Full-Scale Dynamic Tests of Highway Barriers." *Rep. VJ-1472-V-5*, Cornell Aero. Lab. (Dec. 1963).
32. MOORE, R. L., and JEHU, V. J., "Road Safety and the Central Reservation." Paper presented at 7th Internat. Study Week on Traffic Engineering, London (Sept. 1964).
33. KUMMER, K. F., "Highway Safety Products Corporation Guard Rail Test." (June 1961).
34. BOEHRINGER, A., "Essais D'impacts Contre Barriere" (Impact Tests Against Barriers). Paper presented at 7th Internat. Study Week on Traffic Engineering, London (Sept. 1964).
35. "Vägräckesförsök" (Road Guard Experiments). *Spec. Rep. No. 4* (1955) with Supplement No. 1 (1956) and Supplement No. 2 (1957), State Road Inst., Stockholm, Sweden.
36. TANAKA, S., ET AL., "Clashing Test of Service Cars Against and Designing of Heavy Load Type Guard Rail." *Tech. Rep.*, Vol. 60, No. 19, Nippon Kokan.
37. CHRISTIANI & NIELSEN, Ltd., England. Brochure and personal communication.
38. JEHU, V. J., "Safety Fences and Kerbs." *Traffic Eng. and Control*, Vol. 5, No. 9, pp. 534-540 (Jan. 1964).
39. DUCHESNE, A., "The Contribution of Steel to Road Safety." *Acier Stahl Steel*, No. 7-8, pp. 331-337 (1962).
40. "Progress in the OECD Crash Barrier Project." Memorandum from C. W. Prisk, Chairman, Crash Barrier Group of the OECD Working Party on Road Safety Research and Documentation to members of the U.S. Advisory Group on Crash Barriers (May 10, 1966).
41. ROTHE, V. E., ET AL., "Crash Injury Evaluation: Crew Seat Design Criteria for Army Aircraft." *TRECOM Tech. Rep. 63-4*, U.S. Army (Feb. 1963).
42. "Safer Running Out of Road." *Autocar* (July 23, 1965).
43. "Bethlehem Beam Guard Rails." Brochure, Bethlehem Steel Co.
44. "Alcoa Aluminum Beam Guard Rail." Brochure, Aluminum Company of America.
45. ALBERT, C. J., and RADT, H. S., "Predictions of the Lateral-Force, Lateral-Deflection Characteristics of Highway Barriers." *Interim Report No. VJ-1472-V-1*, Cornell Aero. Lab. (Feb. 1961).
46. BARBOZA, G., "Dynamic Loading Test of a Highway Barrier Post in Soil." *Interim Report No. VJ-1472-V-2*, Cornell Aero. Lab. (Apr. 1961).
47. BASTONE, A. L., "Guard Rail Comparative Testing Program." Res. Proj. 1(18) and 1(19), R.I. Dept. of Pub. Works (Jan. 1961).
48. BEATON, J. L., and FIELD, R. N., "Dynamic Full-Scale Tests of Bridge Rails." Calif. Div. of Highways (Dec. 1960).
49. BROWN, C. B., "A Review and Evaluation of Bridge Barrier Design and Experimental Procedures." Calif. Div. of Highways and Inst. of Eng. Res., Univ. of California (Dec. 1964).
50. FIELD, R. N., and BEATON, J. L., "Final Report of Full-Scale Dynamic Tests of Bridge Curbs and Rails." Calif. Div. of Highways (Aug. 1957).
51. FINKBINER, N. M., "Highway Guard Fence." *Tech. Bull. No. 21*, Oregon State Hwy. Dept. (Apr. 1950).
52. FOREMAN, R. T., "A Comparison of the Energy Absorption Capacity of Steel and Aluminum Highway Beam Guard Rail." Bethlehem Steel Co. (Oct. 1961).
53. GRAY, J. H., "Semi-Flexible Suspension Systems for Guard Rails and Median Barriers: Design Study."
54. "Guard Fence and Its Application in the Safe Operation of Highways." Texas Hwy. Dept. (Jan. 1965).
55. "High Absorption Post." *Rep. No. HA-1707* (for Minn. Dept. of Highways), Harvey Eng. Labs. (Apr. 1961).
56. "Highway Guardrail Report." Ill. Div. of Highways.
57. HUELKE, D. F., and GIKAS, P. W., "Nonintersectional Automobile Fatalities: A Problem in Roadway Design."
58. JOHNSON, R. T., and TAMBURRI, T. N., "Report on Need for Guard Rail on Freeways Adjacent to Improved Properties." Calif. Div. of Highways (July 1962).
59. KONDNER, R. L., ET AL., "Lateral Stability of Rigid Poles Subjected to a Ground-Line Thrust." *HRB Bull. 342*, pp. 124-151 (1962).
60. KONDNER, R. L., and CUNNINGHAM, J. A., "Lateral Stability of Rigid Poles Partially Embedded in Sand." *Hwy. Res. Record No. 39*, pp. 49-67 (1963).
61. LUNDSTROM, L. C., SKEELS, P. C., ENGLUND, B. R., and ROGERS, P. A., "A Bridge Parapet Designed for Safety—General Motors Proving Ground Circular Test Track Project." *Hwy. Res. Record No. 83*, pp. 169-187 (1965).
62. MACKAY, G. M., "A Review of Road Accident Research." *Publ. No. 10*, Dept. of Transp. and Envir. Planning, Univ. of Birmingham (Aug. 1965).
63. MCALPIN, G. W., GRAHAM, M. D., BURNETT, W. C., and MCHENRY, R. R., "Development of an Analytical Procedure for Prediction of Highway Barrier Performance." *Hwy. Res. Record No. 83*, pp. 188-200 (1965).
64. MINDLIN, H., "Tests of Bridge Rail Assemblies." *Lab. Rep. No. 200.59.13*, Fritz Eng. Lab., Lehigh Univ. (Jan. 1960).

65. MOSKOWITZ, K., and SCHAEFER, W. E., "California Median Study: 1958." *HRB Bull. 260*, pp. 34-62 (1960).

66. MURPHY, W. K., "Impact Resistance of Highway Guard Posts." Proj. M-129, Wood Preserving Div., Koppers Co. (Aug. 1954).

67. NORDLIN, E. F., FIELD, R. N., and HACKETT, R. P.," Dynamic Full-Scale Impact Tests of Bridge Barrier Rails." *HRB Record No. 83*, pp. 132-168 (1965).

68. PELLEGRINI, G., "Dispositions de Sécurité et D'Anti-Éblouissement Sur Les Bermes Centrales" (Safety and Anti-Glare Installations on Medians). 7th Internat. Study Week on Traffic Eng., London (1964).

69. PLATT, F. N., "A New Approach to the Design of Safer Structures for Highways." Ford Motor Co. (Aug. 1962).

70. SAMSON, C. H., ET AL., "Impact Behavior of Sign Supports—A Progress Report." *Res. Rep. 68-1*, Texas Transp. Inst., Texas A & M Univ. (Mar. 1965).

71. SERGAD, S. A., "Esperienze di Urto al Vero di Veicolo Contio Barriere di Sicurezza" (Experiments with Actual Crashes of Vehicles Against Guard Rails). *Proc. 4th Nat'l. Conv. of Traffic Eng.*, Pistoia, Italy (May 1964).

72. SHILTS, W. L., GRAVES, L. D., and DRISCOLL, G. G., "A Report of Field and Laboratory Tests on the Stability of Posts Against Lateral Loads." *Proc. 2nd Internat. Conf. on Soil Mech. and Found Eng.*, Rotterdam (1948).

73. STRASSENMEYER, O. A., "Highway Guardrail Study." Div. of Res. and Devel., Conn. State Hwy. Dept. (Aug. 1960).

74. "Technical Report of Progress in Guard Rail Accident Research." Bur. of Traffic, Pa. Dept. of Highways (June 1946).

Published reports of the

NATIONAL COOPERATIVE HIGHWAY RESEARCH PROGRAM

are available from:

Highway Research Board
National Academy of Sciences
2101 Constitution Avenue
Washington, D.C. 20418

Rep. No. Title

—* A Critical Review of Literature Treating Methods of Identifying Aggregates Subject to Destructive Volume Change When Frozen in Concrete and a Proposed Program of Research—Intermediate Report (Proj. 4-3(2)), 81 p., $1.80

1 Evaluation of Methods of Replacement of Deteriorated Concrete in Structures (Proj. 6-8), 56 p., $2.80

2 An Introduction to Guidelines for Satellite Studies of Pavement Performance (Proj. 1-1), 19 p., $1.80

2A Guidelines for Satellite Studies of Pavement Performance, 85 p.+9 figs., 26 tables, 4 app., $3.00

3 Improved Criteria for Traffic Signals at Individual Intersections—Interim Report (Proj. 3-5), 36 p., $1.60

4 Non-Chemical Methods of Snow and Ice Control on Highway Structures (Proj. 6-2), 74 p., $3.20

5 Effects of Different Methods of Stockpiling Aggregates—Interim Report (Proj. 10-3), 48 p., $2.00

6 Means of Locating and Communicating with Disabled Vehicles—Interim Report (Proj. 3-4), 56 p., $3.20

7 Comparison of Different Methods of Measuring Pavement Condition—Interim Report (Proj. 1-2), 29 p., $1.80

8 Synthetic Aggregates for Highway Construction (Proj. 4-4), 13 p., $1.00

9 Traffic Surveillance and Means of Communicating with Drivers—Interim Report (Proj. 3-2), 28 p., $1.60

10 Theoretical Analysis of Structural Behavior of Road Test Flexible Pavements (Proj. 1-4), 31 p., $2.80

11 Effect of Control Devices on Traffic Operations—Interim Report (Proj. 3-6), 107 p., $5.80

12 Identification of Aggregates Causing Poor Concrete Performance When Frozen—Interim Report (Proj. 4-3(1)), 47 p., $3.00

13 Running Cost of Motor Vehicles as Affected by Highway Design—Interim Report (Proj. 2-5), 43 p., $2.80

14 Density and Moisture Content Measurements by Nuclear Methods—Interim Report (Proj. 10-5), 32 p., $3.00

15 Identification of Concrete Aggregates Exhibiting Frost Susceptibility—Interim Report (Proj. 4-3(2)), 66 p., $4.00

Rep. No. Title

16 Protective Coatings to Prevent Deterioration of Concrete by Deicing Chemicals (Proj. 6-3), 21 p., $1.60

17 Development of Guidelines for Practical and Realistic Construction Specifications (Proj. 10-1), 109 p., $6.00

18 Community Consequences of Highway Improvement (Proj. 2-2), 37 p., $2.80

19 Economical and Effective Deicing Agents for Use on Highway Structures (Proj. 6-1), 19 p., $1.20

20 Economic Study of Roadway Lighting (Proj. 5-4), 77 p., $3.20

21 Detecting Variations in Load-Carrying Capacity of Flexible Pavements (Proj. 1-5), 30 p., $1.40

22 Factors Influencing Flexible Pavement Performance (Proj. 1-3(2)), 69 p., $2.60

23 Methods for Reducing Corrosion of Reinforcing Steel (Proj. 6-4), 22 p., $1.40

24 Urban Travel Patterns for Airports, Shopping Centers, and Industrial Plants (Proj. 7-1), 116 p., $5.20

25 Potential Uses of Sonic and Ultrasonic Devices in Highway Construction (Proj. 10-7), 48 p., $2.00

26 Development of Uniform Procedures for Establishing Construction Equipment Rental Rates (Proj. 13-1), 33 p., $1.60

27 Physical Factors Influencing Resistance of Concrete to Deicing Agents (Proj. 6-5), 41 p., $2.00

28 Surveillance Methods and Ways and Means of Communicating with Drivers (Proj. 3-2), 66 p., $2.60

29 Digital-Computer-Controlled Traffic Signal System for a Small City (Proj. 3-2), 82 p., $4.00

30 Extension of AASHO Road Test Performance Concepts (Proj. 1-4(2)), 33 p., $1.60

31 A Review of Transportation Aspects of Land-Use Control (Proj. 8-5), 41 p., $2.00

32 Improved Criteria for Traffic Signals at Individual Intersections (Proj. 3-5), 134 p., $5.00

33 Values of Time Savings of Commercial Vehicles (Proj. 2-4), 74 p., $3.60

34 Evaluation of Construction Control Procedures—Interim Report (Proj. 10-2), 117 p., $5.00

35 Prediction of Flexible Pavement Deflections from Laboratory Repeated-Load Tests (Proj. 1-3(3)), 117 p., $5.00

36 Highway Guardrails—A Review of Current Practice (Proj. 15-1), 33 p., $1.60

* Highway Research Board Special Report 80.

THE NATIONAL ACADEMY OF SCIENCES is a private, honorary organization of more than 700 scientists and engineers elected on the basis of outstanding contributions to knowledge. Established by a Congressional Act of Incorporation signed by President Abraham Lincoln on March 3, 1863, and supported by private and public funds, the Academy works to further science and its use for the general welfare by bringing together the most qualified individuals to deal with scientific and technological problems of broad significance.

Under the terms of its Congressional charter, the Academy is also called upon to act as an official—yet independent—adviser to the Federal Government in any matter of science and technology. This provision accounts for the close ties that have always existed between the Academy and the Government, although the Academy is not a governmental agency and its activities are not limited to those on behalf of the Government.

THE NATIONAL ACADEMY OF ENGINEERING was established on December 5, 1964. On that date the Council of the National Academy of Sciences, under the authority of its Act of Incorporation, adopted Articles of Organization bringing the National Academy of Engineering into being, independent and autonomous in its organization and the election of its members, and closely coordinated with the National Academy of Sciences in its advisory activities. The two Academies join in the furtherance of science and engineering and share the responsibility of advising the Federal Government, upon request, on any subject of science or technology.

THE NATIONAL RESEARCH COUNCIL was organized as an agency of the National Academy of Sciences in 1916, at the request of President Wilson, to enable the broad community of U. S. scientists and engineers to associate their efforts with the limited membership of the Academy in service to science and the nation. Its members, who receive their appointments from the President of the National Academy of Sciences, are drawn from academic, industrial and government organizations throughout the country. The National Research Council serves both Academies in the discharge of their responsibilities.

Supported by private and public contributions, grants, and contracts, and voluntary contributions of time and effort by several thousand of the nation's leading scientists and engineers, the Academies and their Research Council thus work to serve the national interest, to foster the sound development of science and engineering, and to promote their effective application for the benefit of society.

THE DIVISION OF ENGINEERING is one of the eight major Divisions into which the National Research Council is organized for the conduct of its work. Its membership includes representatives of the nation's leading technical societies as well as a number of members-at-large. Its Chairman is appointed by the Council of the Academy of Sciences upon nomination by the Council of the Academy of Engineering.

THE HIGHWAY RESEARCH BOARD, organized November 11, 1920, as an agency of the Division of Engineering, is a cooperative organization of the highway technologists of America operating under the auspices of the National Research Council and with the support of the several highway departments, the Bureau of Public Roads, and many other organizations interested in the development of highway transportation. The purposes of the Board are to encourage research and to provide a national clearinghouse and correlation service for research activities and information on highway administration and technology.